Title	<Title>		
Size A3	Document Number <Doc>		Rev <RevCo
Date: Friday, November 29, 2019	Sheet 1 of 74		

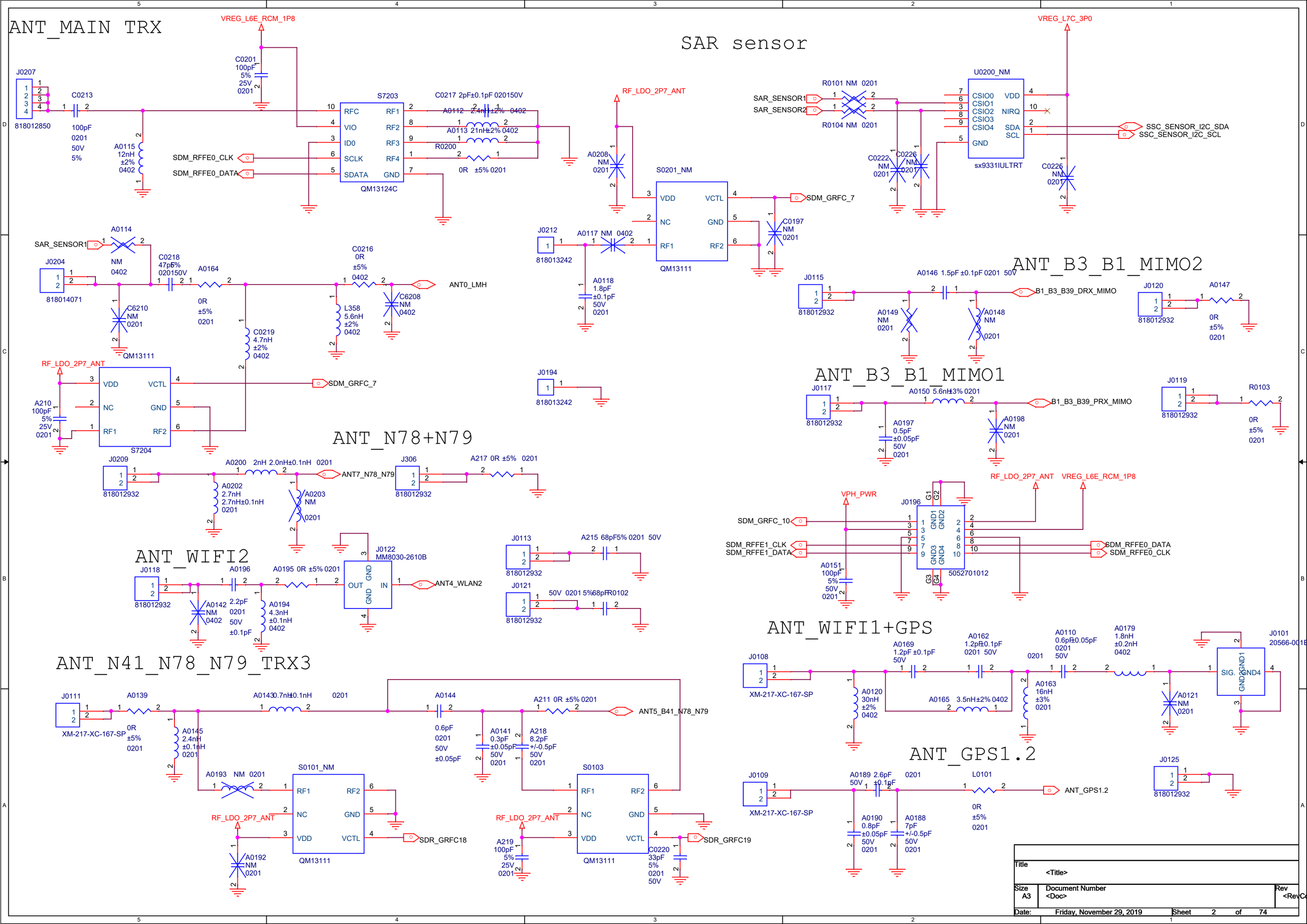
ANT_MAIN TRX
SAR sensor
ANT_B3_B1_MIMO2
ANT_B3_B1_MIMO1
ANT_N78+N79
ANT_WIFI2
ANT_N41_N78_N79_TRX3
ANT_WIFI1+GPS
ANT_GPS1.2
VREG_L6E_RCM_1P8
VREG_L7C_3P0
RF_LDO_2P7_ANT
VPH_PWR
SDM_RFFE0_CLK
SDM_RFFE0_DATA
SDM_GRFC_7
SDM_GRFC_10
SDM_RFFE1_CLK
SDM_RFFE1_DATA
SSC_SENSOR_I2C_SDA
SSC_SENSOR_I2C_SCL
SAR_SENSOR1
SAR_SENSOR2
ANT0_LMH
B1_B3_B39_DRX_MIMO
B1_B3_B39_PRX_MIMO
ANT7_N78_N79
ANT4_WLAN2
ANT5_B41_N78_N79
SDR_GRFC18
SDR_GRFC19
ANT_GPS1.2
S7203
QM13124C
S0201_NM
QM13111
S7204
S0101_NM
S0103
U0200_NM
sx9331IULTRT
J0122
MM8030-2610B
J0196
5052701012
J0101
20566-001B
XM-217-XC-167-SP
818012850
818014071
818012932
818013242
Title
<Title>
Size
A3
Document Number
<Doc>
Rev
<RevC
Date:
Friday, November 29, 2019
Sheet
2
of
74

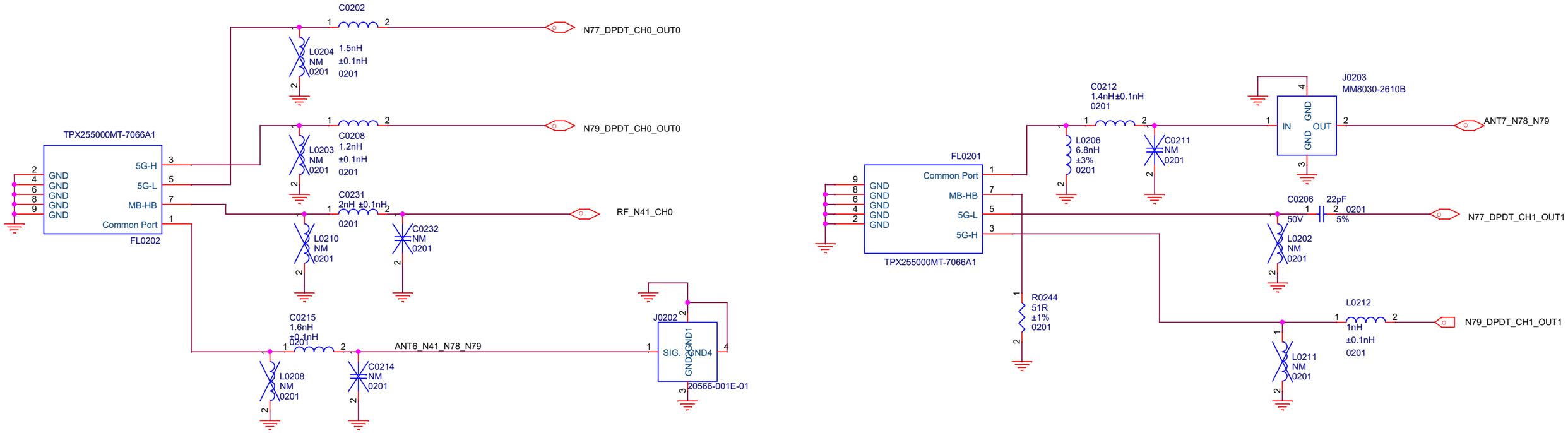

Title	F1 MAIN	
Size A3	Document Number <Doc>	Rev P0
Date: Friday, November 29, 2019	Sheet 3 of 72	

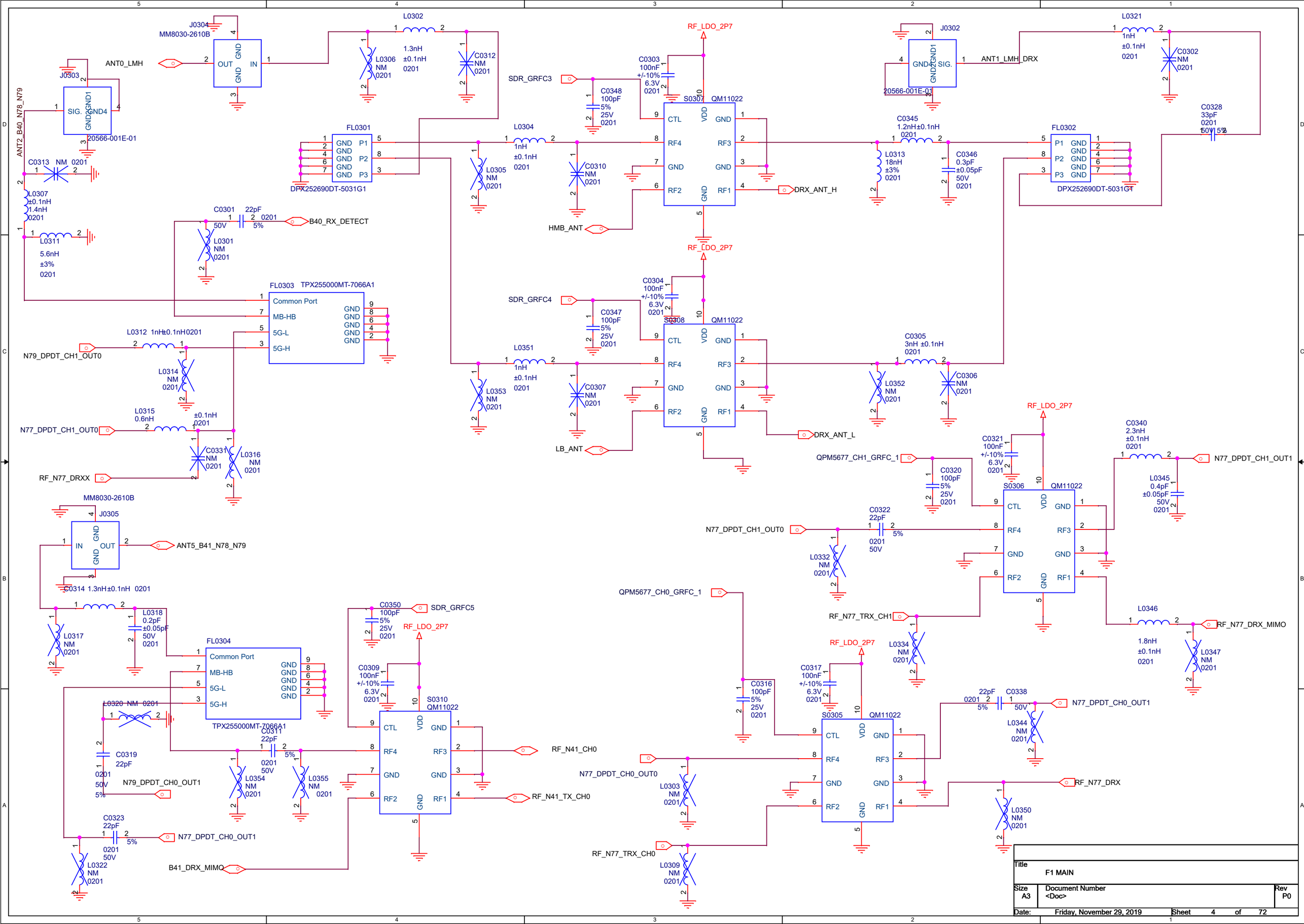

Title	F1 MAIN	
Size A3	Document Number <Doc>	Rev P0
Date: Friday, November 29, 2019	Sheet 4 of 72	

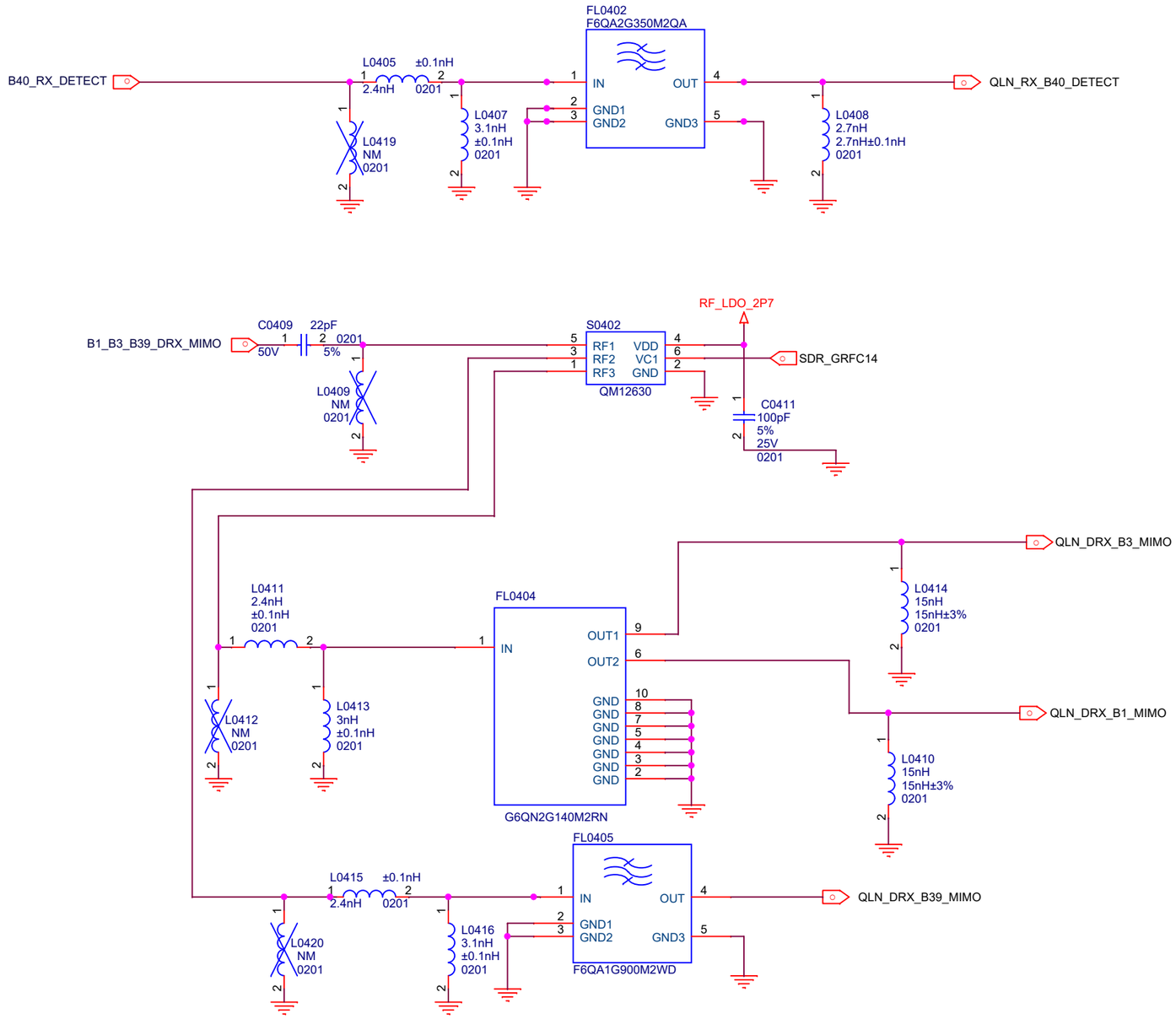

Title	F1 MAIN	
Size A3	Document Number <Doc>	Rev P0
Date: Friday, November 29, 2019	Sheet 5 of 72	

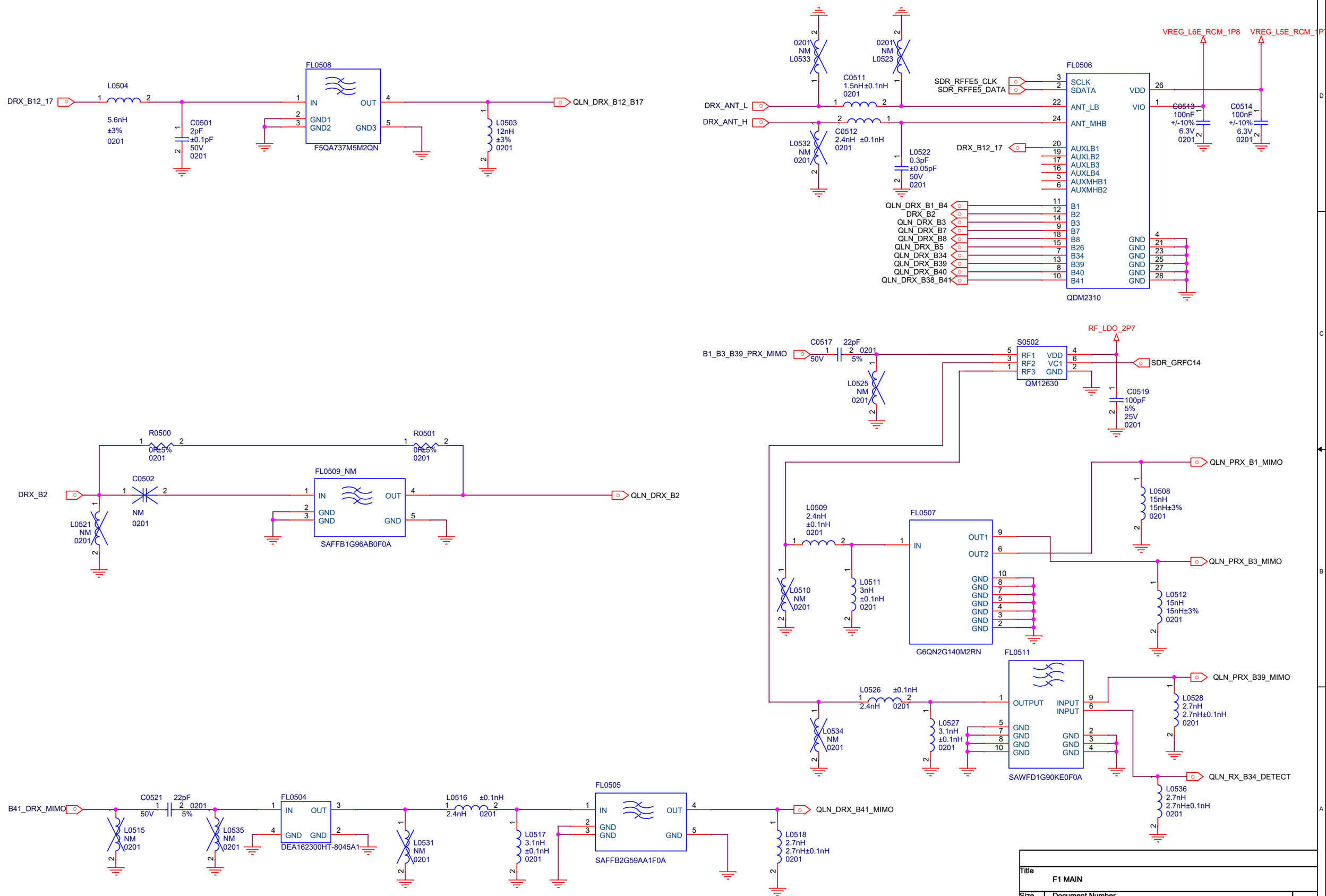

Title	F1 MAIN	
Size A3	Document Number <Doc>	P0
Date: Friday, November 29, 2019	Sheet 6 of 72	

LB S-PAD

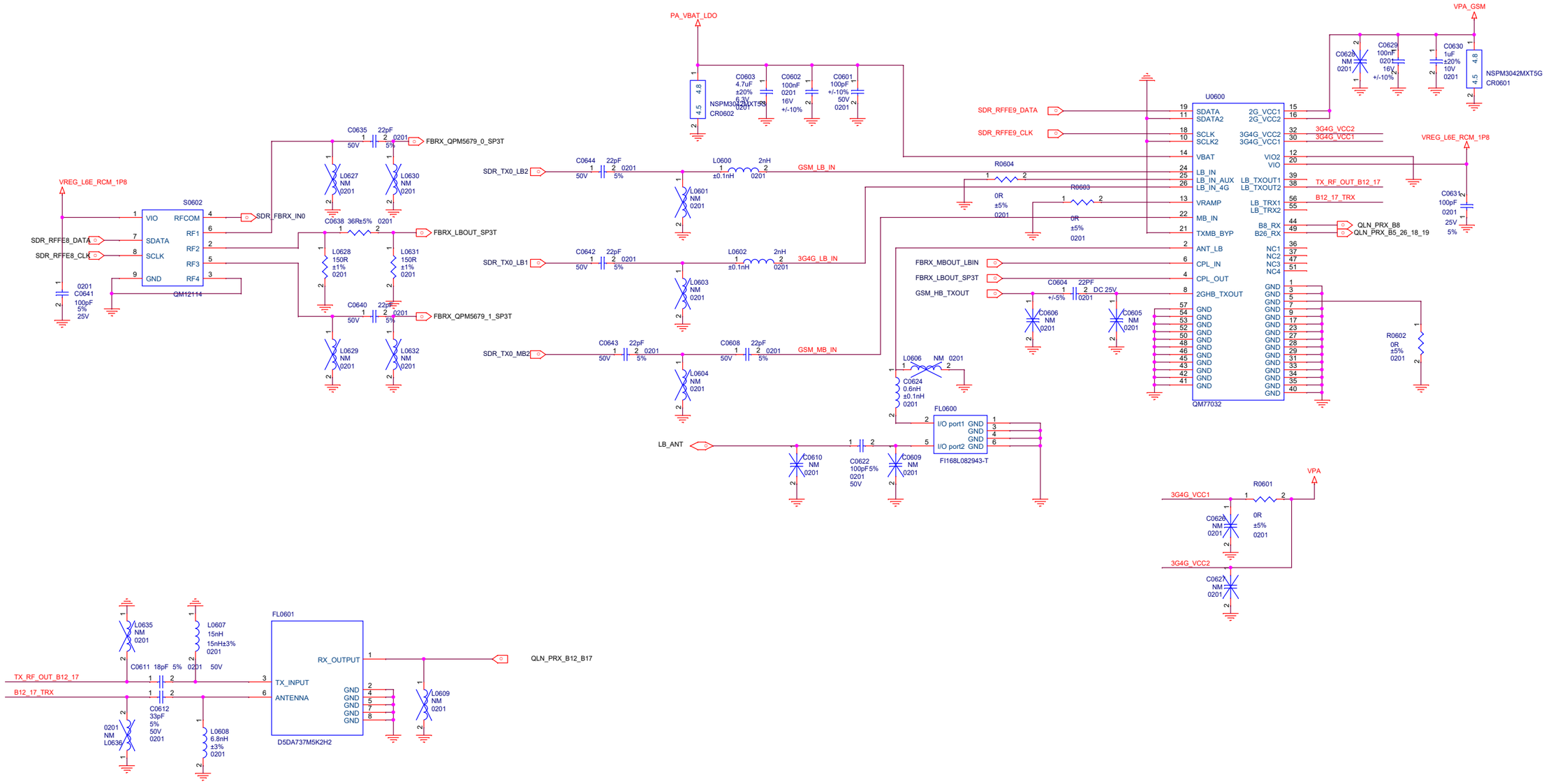

Title	F1 MAIN
Size A2	Document Number PA1
Date: Friday, November 29, 2019	Sheet 7 of 72

MHB S-PAD

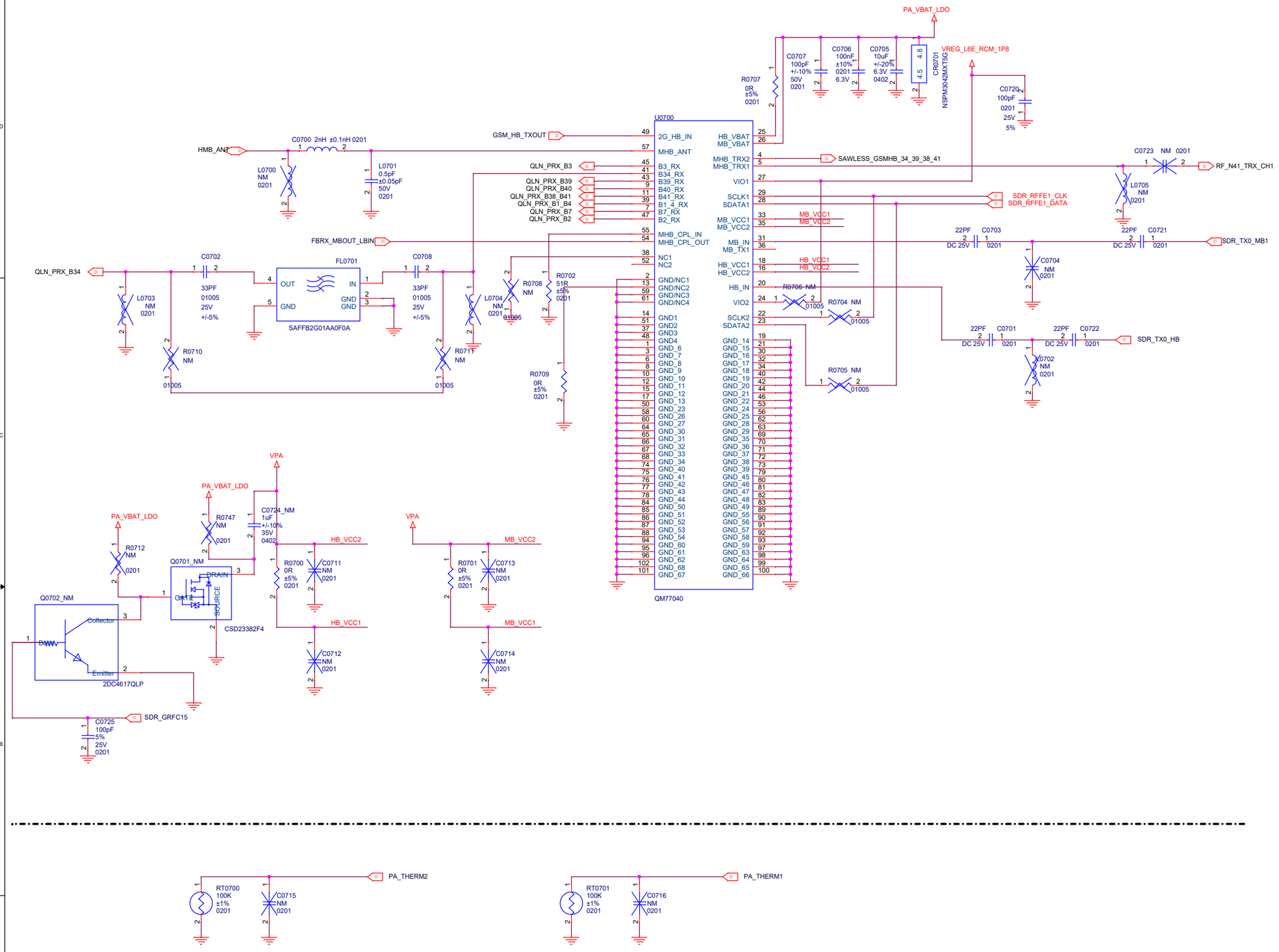

Title	F1 MAIN
Size A2	Document Number PA2
Date: Friday, November 29, 2019	Sheet 8 of 72

Title	F1 MAIN
Size A3	Document Number Reserved(for PA)
Date: Friday, November 29, 2019	Sheet 9 of 72

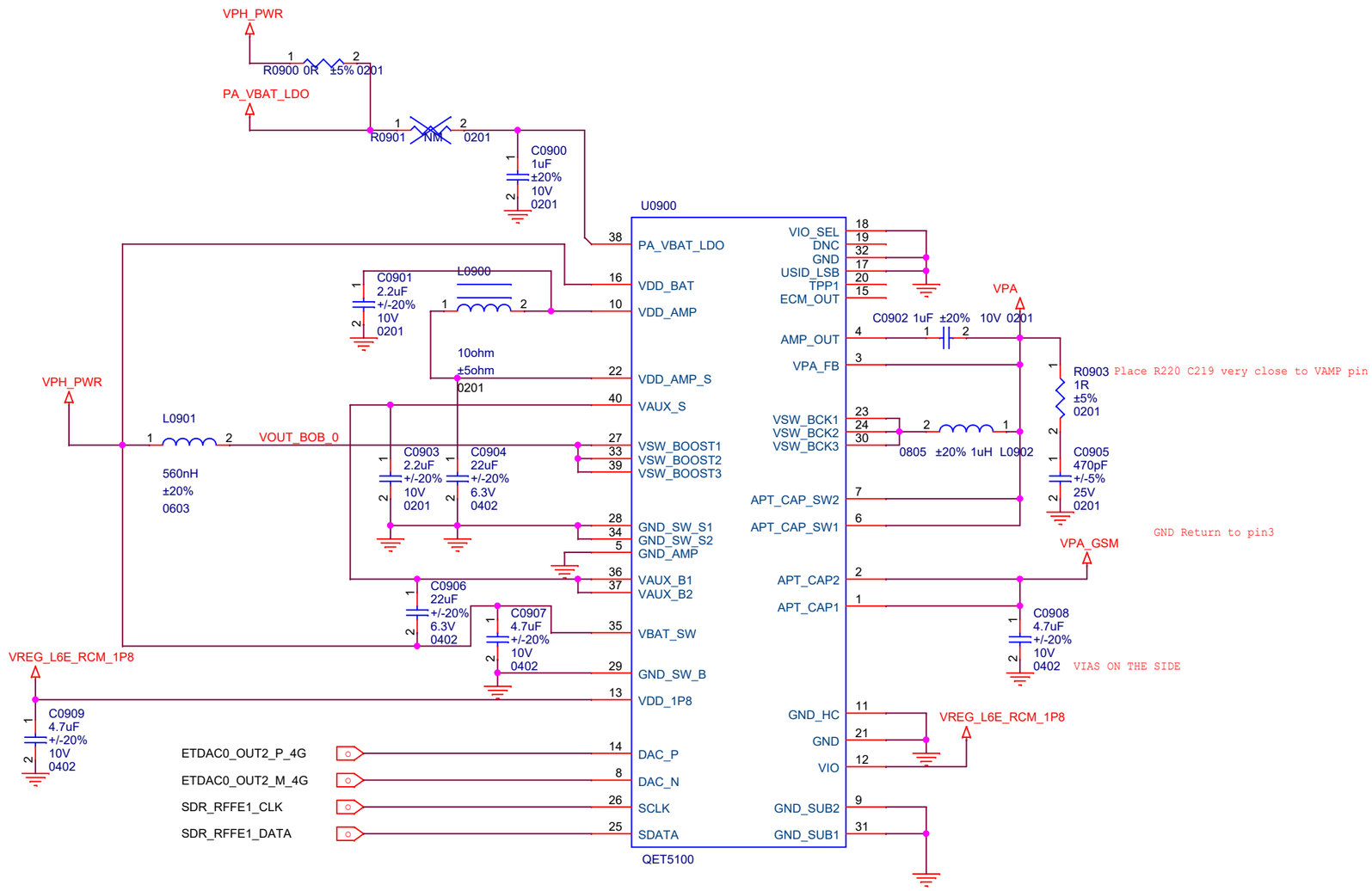

Title	F1 MAIN	
Size A3	Document Number RF DC-DC	P0
Date: Friday, November 29, 2019	Sheet 10 of 74	

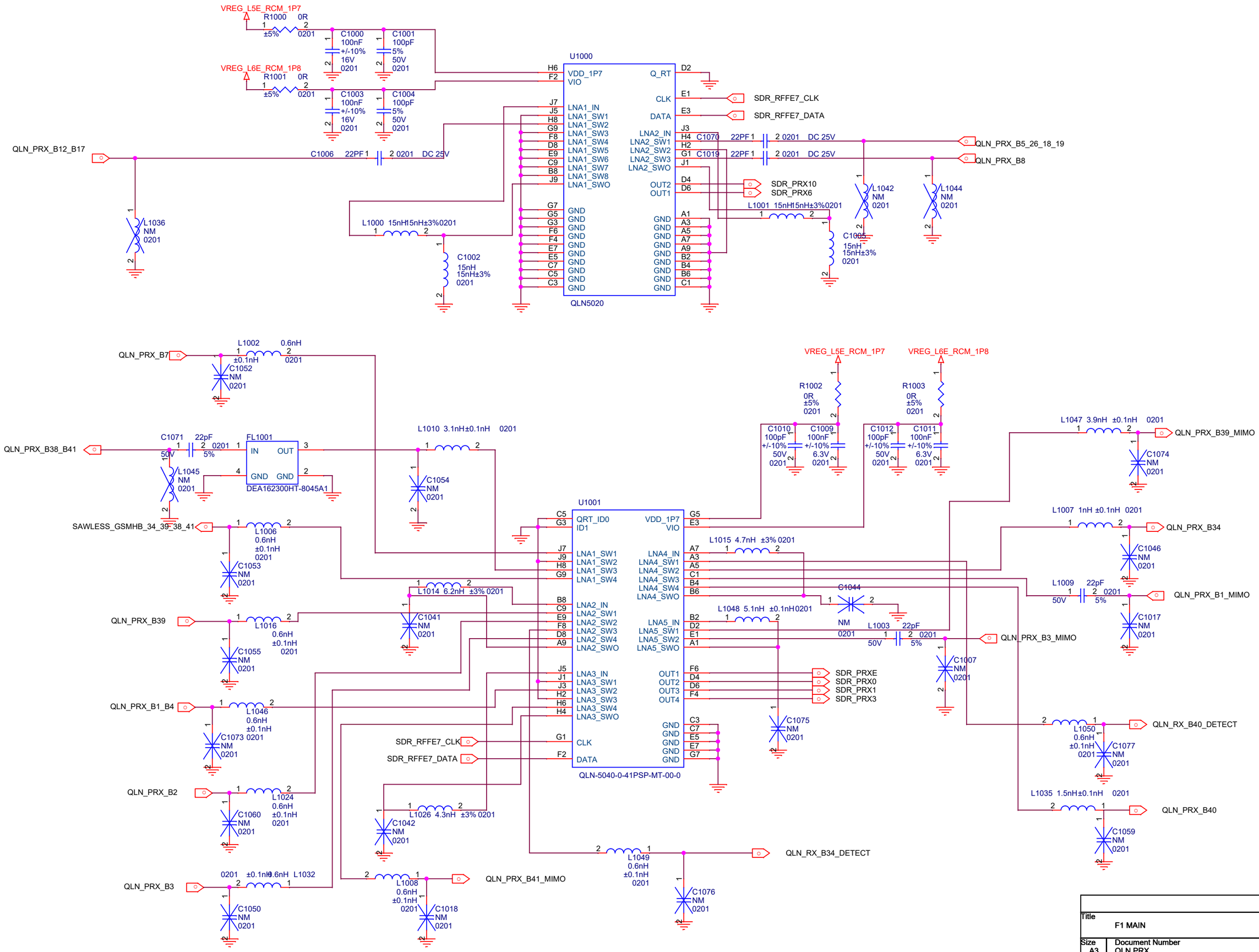

Title	F1 MAIN
Size A3	Document Number QLN PRX
Rev	P0
Date:	Friday, November 29, 2019
Sheet	11 of 72

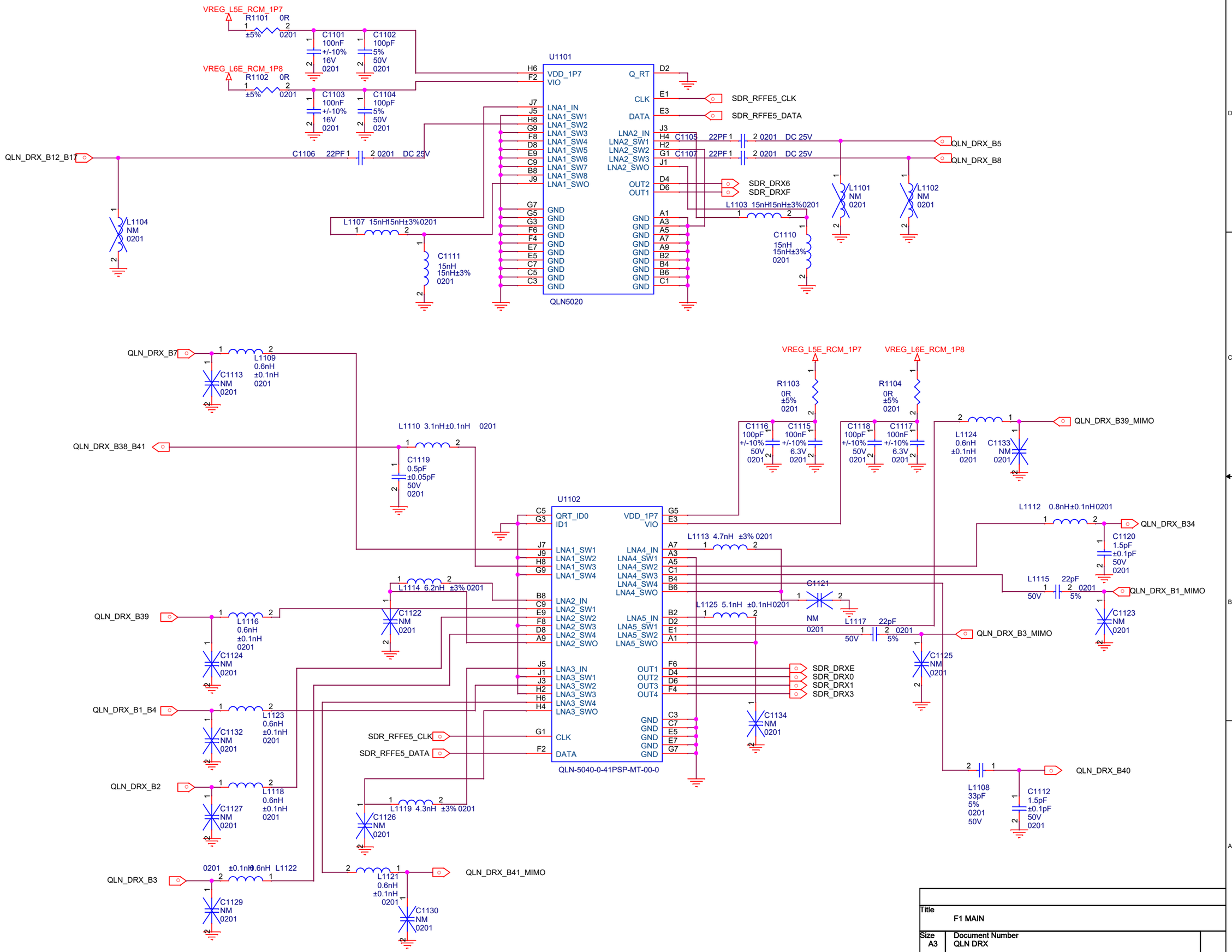

Title	F1 MAIN
Size A3	Document Number QLN DRX
Date: Friday, November 29, 2019	Sheet

Title	F1 MAIN
Size A3	Document Number Reserved(for LNA)
Date: Friday, November 29, 2019	Sheet

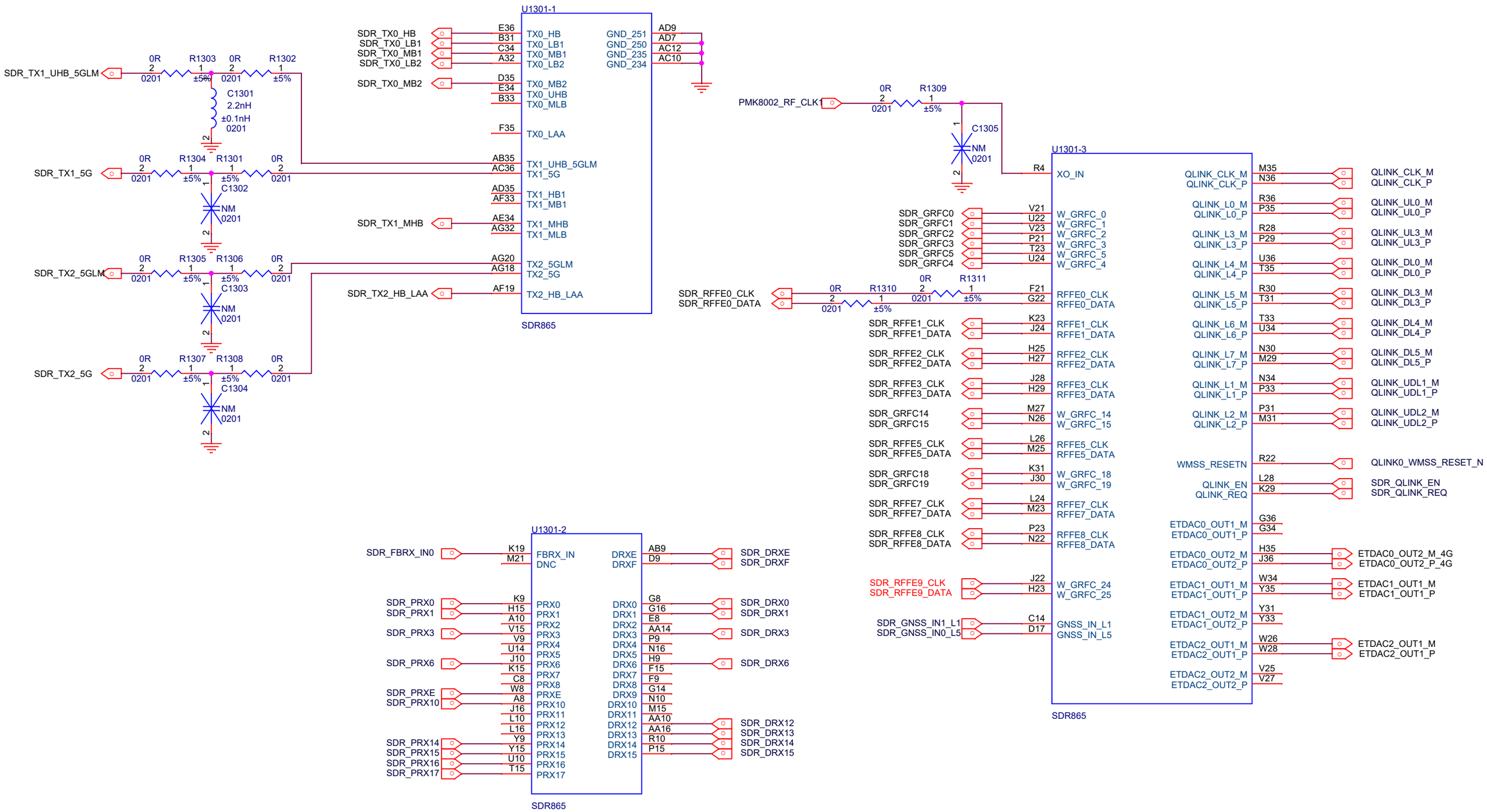

Title	F1 MAIN
Size A3	Document Number WTR Interface
Date: Friday, November 29, 2019	Sheet 14 72

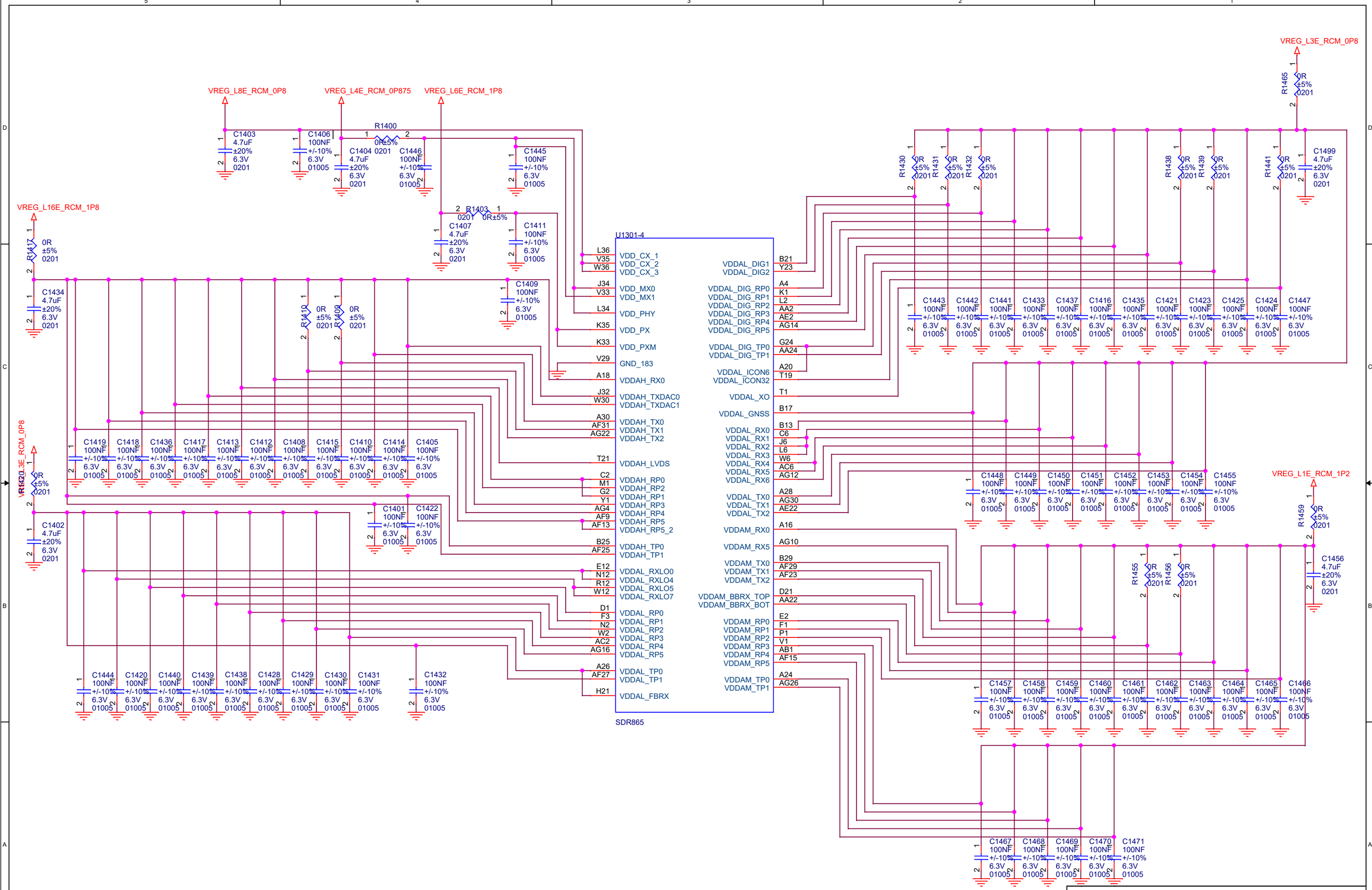

Title	F1 MAIN
Size A3	Document Number WTR PWR
Date: Friday, November 29, 2019	Sheet 15 74

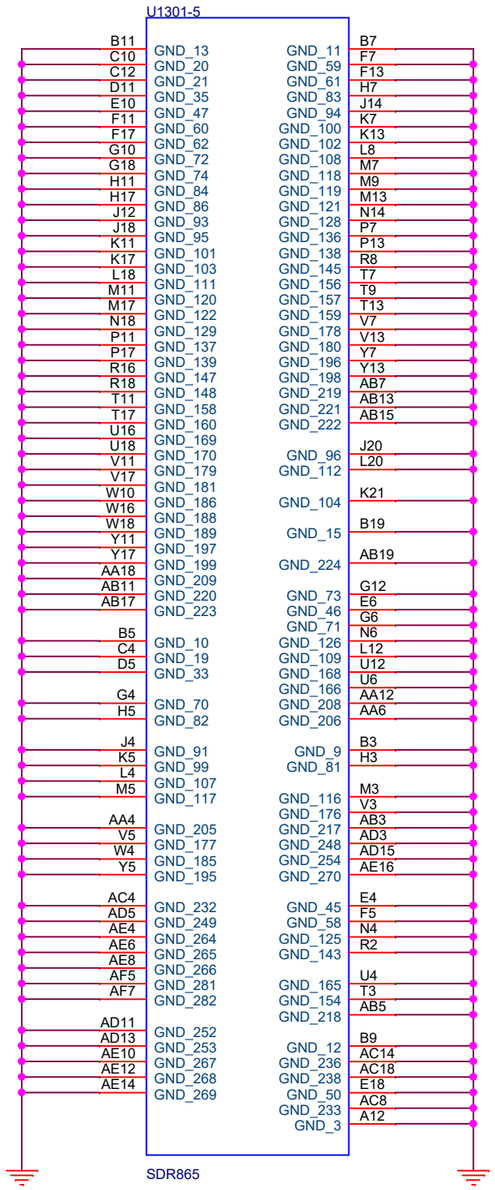

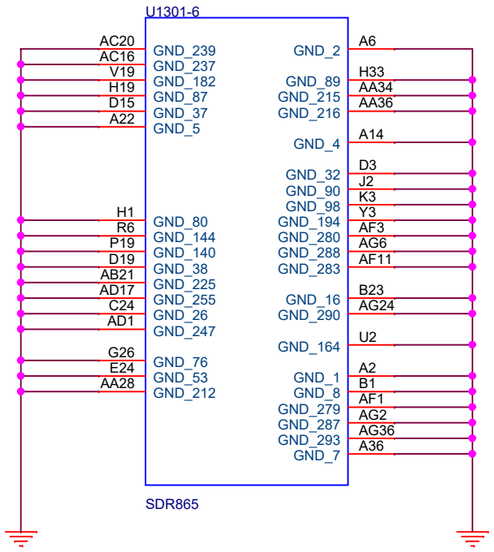

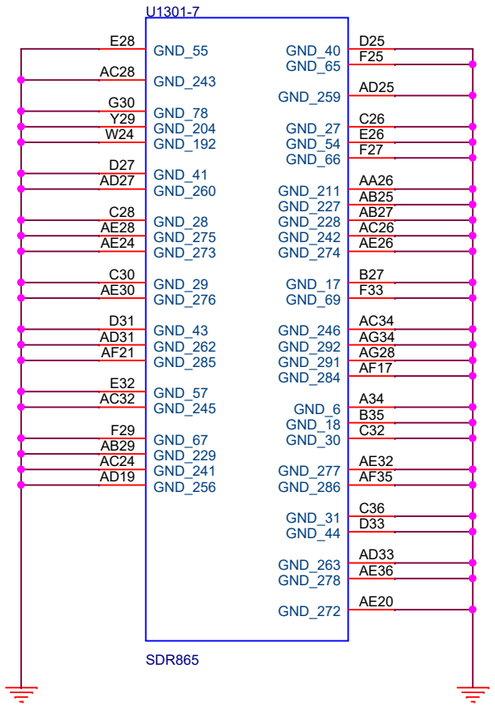

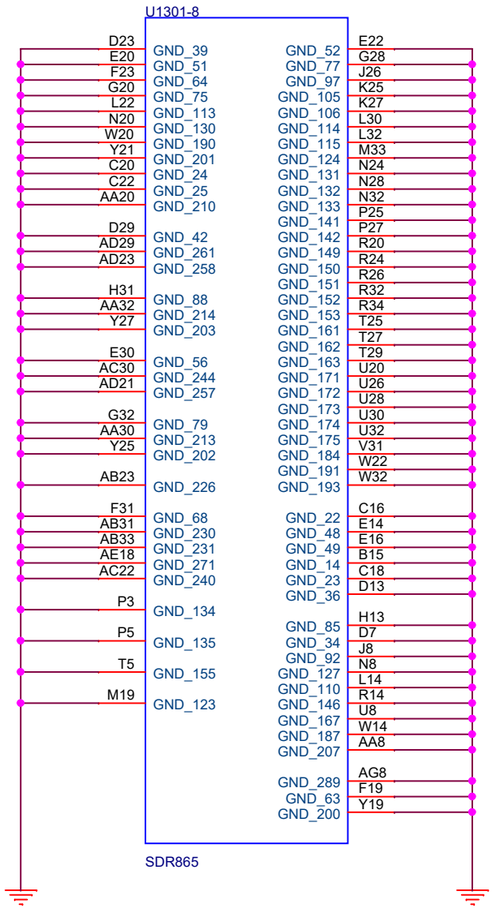

Title	F1 MAIN		
Size A3	Document Number Reserved(for WTR)		
Date:	Friday, November 29, 2019	Sheet 16	74

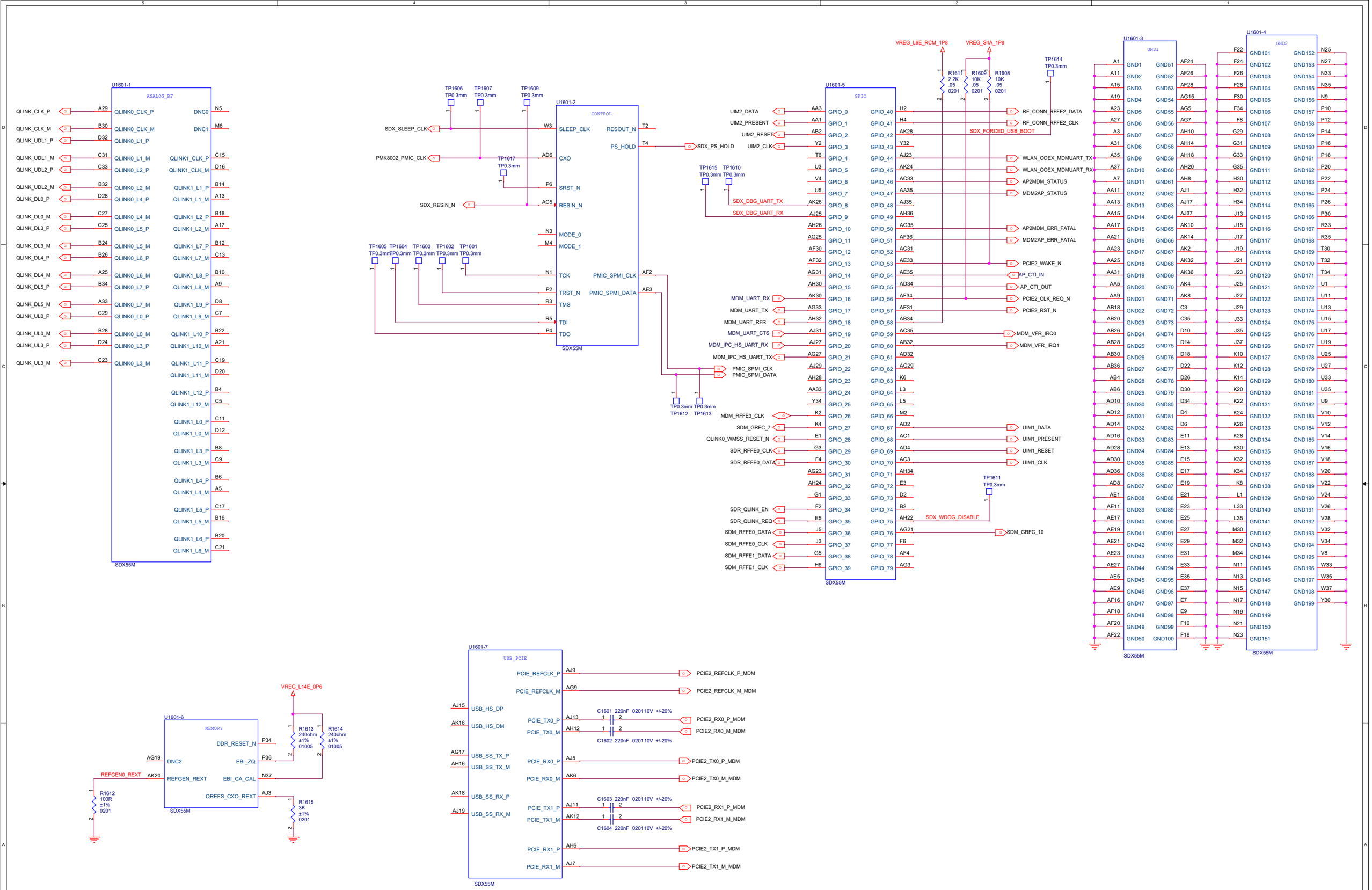

Title	F1 MAIN
Size A2	Document Number Reserved(for 5G-sub 6G)
Date: Friday, November 29, 2019	Sheet

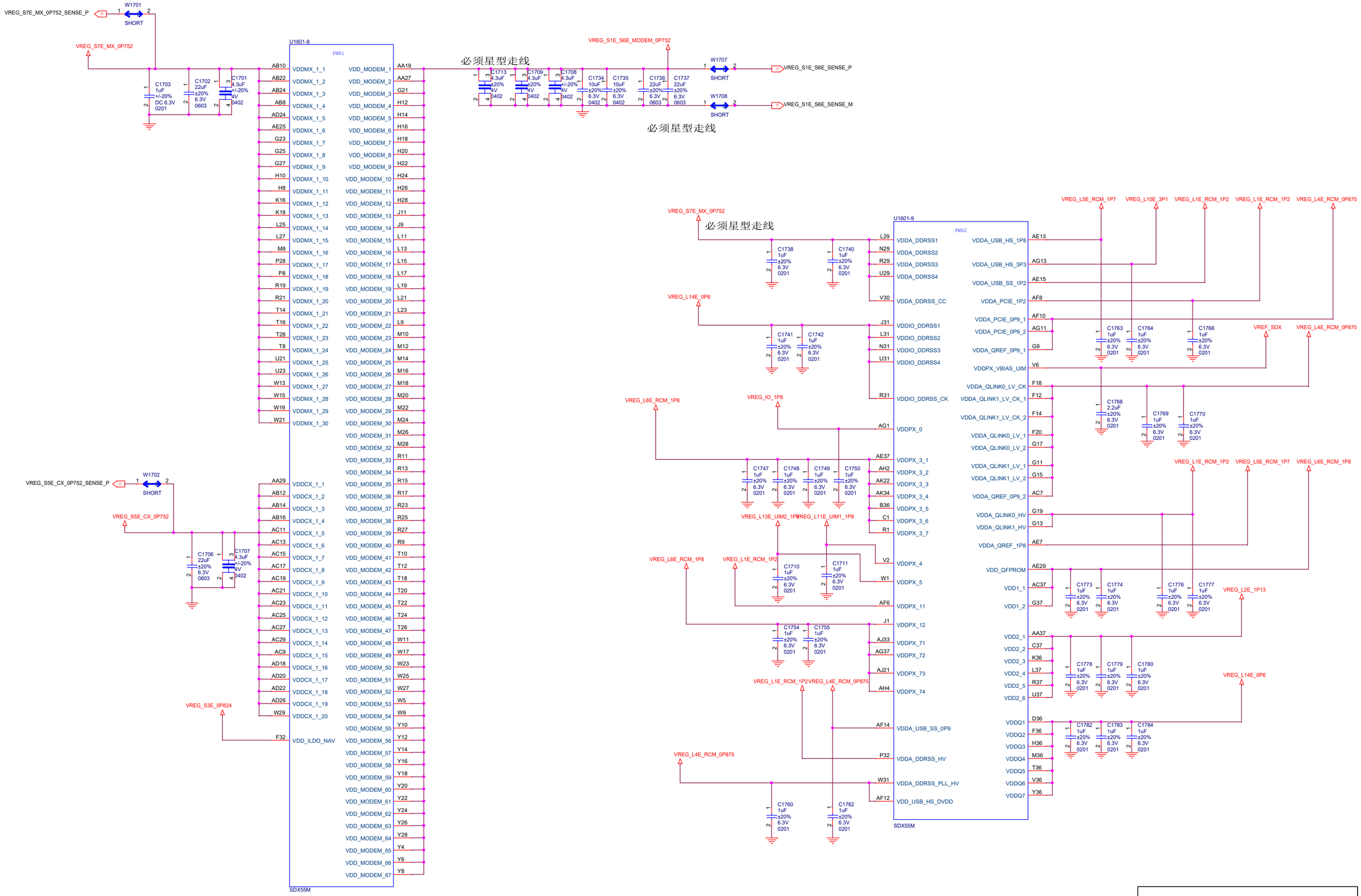

Title	F1 MAIN
Size A2	Document Number Reserved(for MM Wave)
Date:	Friday, November 29, 2019

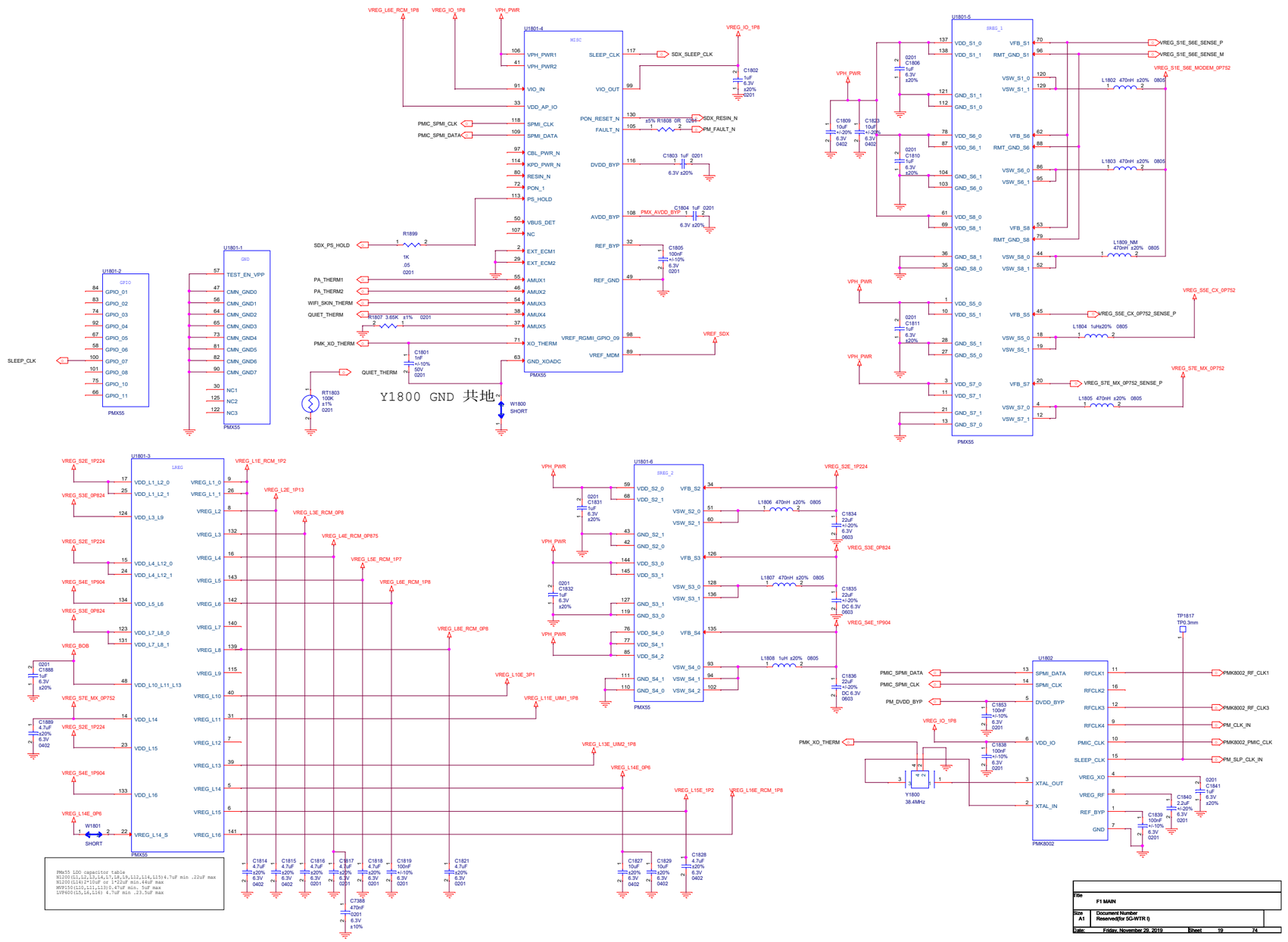
U1801-4
MISC
U1801-5
SMPS_1
U1801-1
GND
U1801-2
GPIO
U1801-3
LREG
U1801-6
SMPS_2
U1802
PMK8002
Y1800 GND 共地
PMK55 LDO capacitor table
N1200(L1,L2,L3,L4,L7,L8,L9,L12,L14,L15)4.7uF min .22uF max
N1200(L16)2*10uF or 1*22uF min.44uF max
MVP150(L10,L11,L13)6.47uF min. 5uF max
LVP600(L5,L6,L16) 4.7uF min .23.5uF max
Title
F1 MAIN
Size
A1
Document Number
Reserved(for 5G-WTR I)
Date:
Friday, November 29, 2019
Sheet
19
74

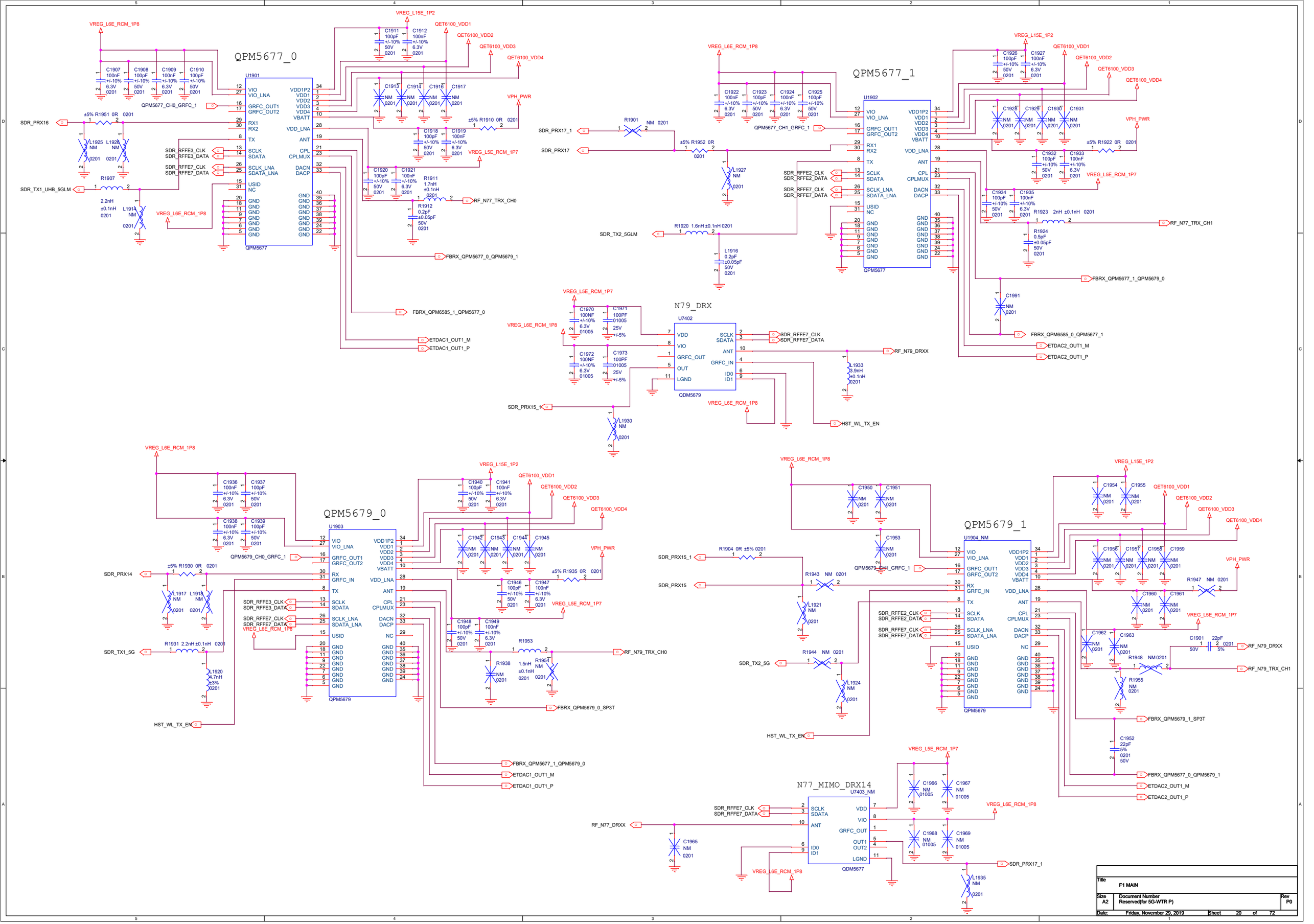
QPM5677_0
U1901
QPM5677
QPM5677_1
U1902
QPM5677
N79_DRX
U7402
QDM5679
QPM5679_0
U1903
QPM5679
QPM5679_1
U1904_NM
QPM5679
N77_MIMO_DRX14
U7403_NM
QDM5677
Title
F1 MAIN
Size
A2
Document Number
Reserved(for 5G-WTR P)
Rev
P0
Date:
Friday, November 29, 2019
Sheet
20
of
72

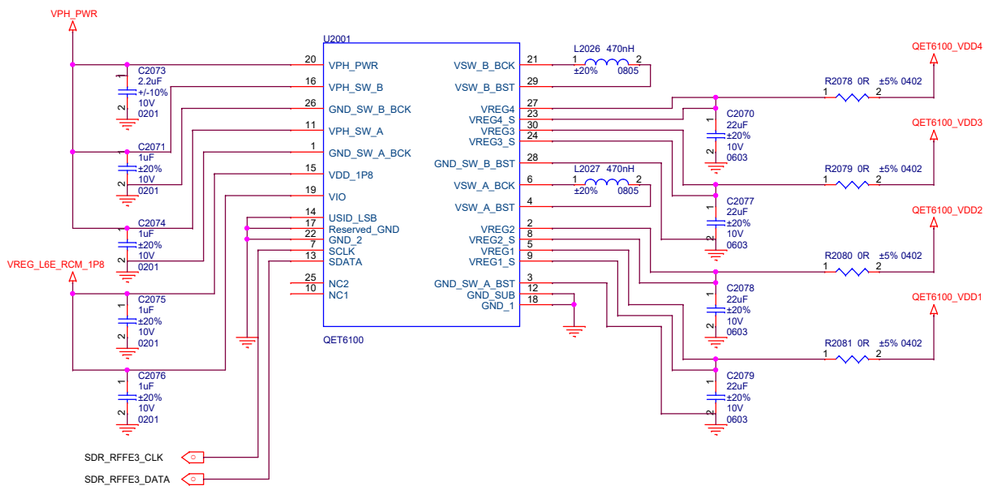

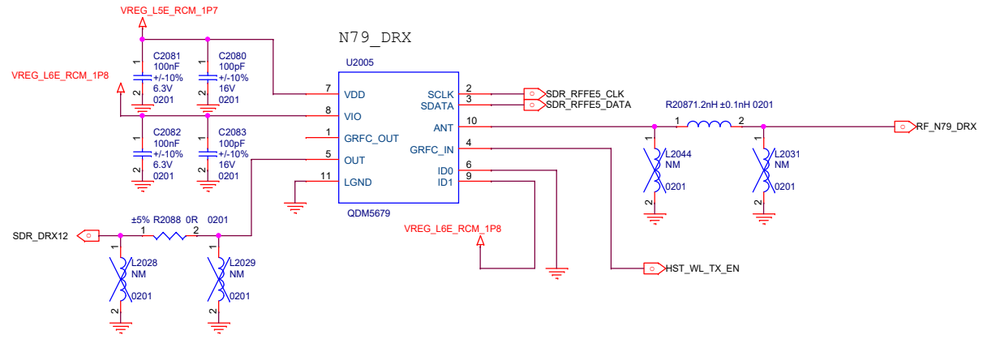

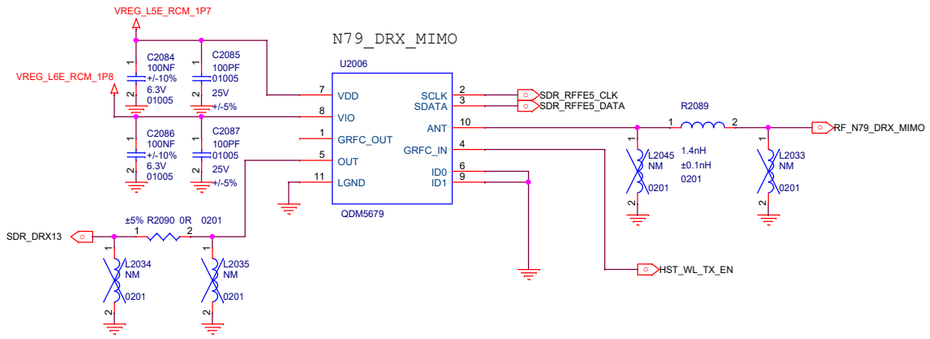

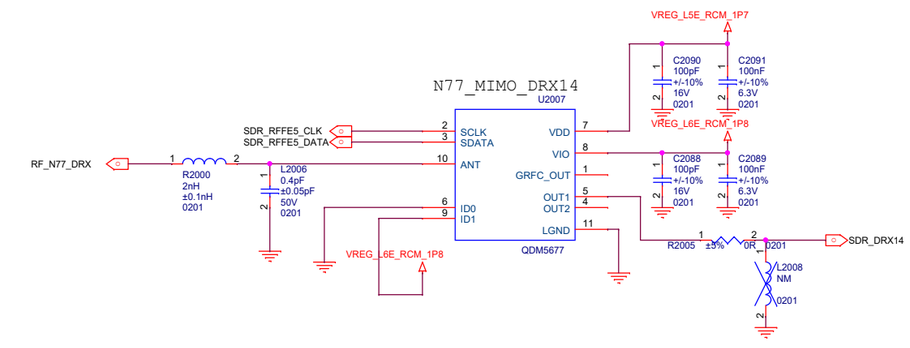

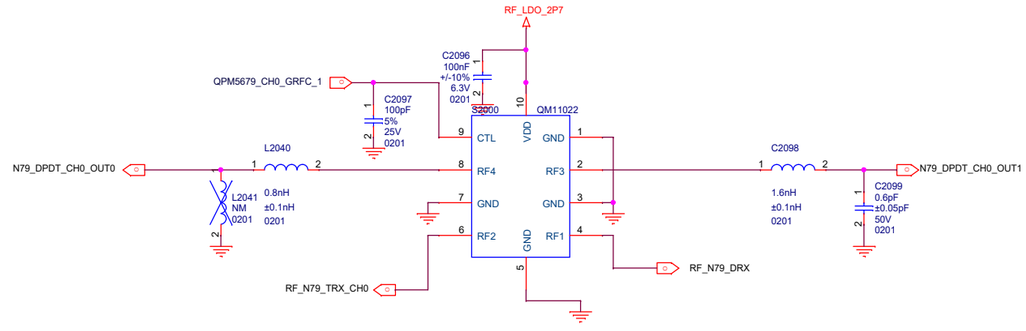

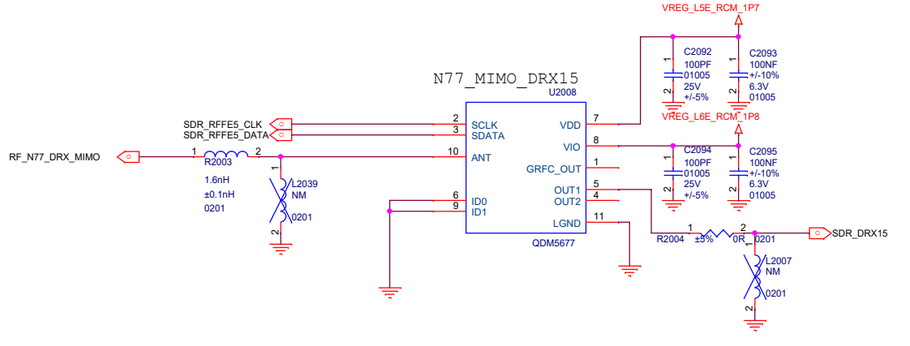

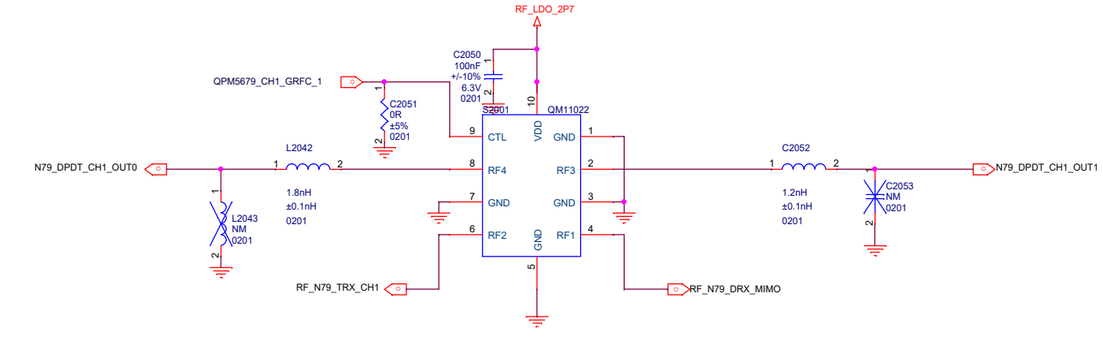

Title	F1 MAIN
Size A2	Document Number Reserved(for 5G-DC/DC)
Date: Friday, November 29, 2019	Sheet 21 72

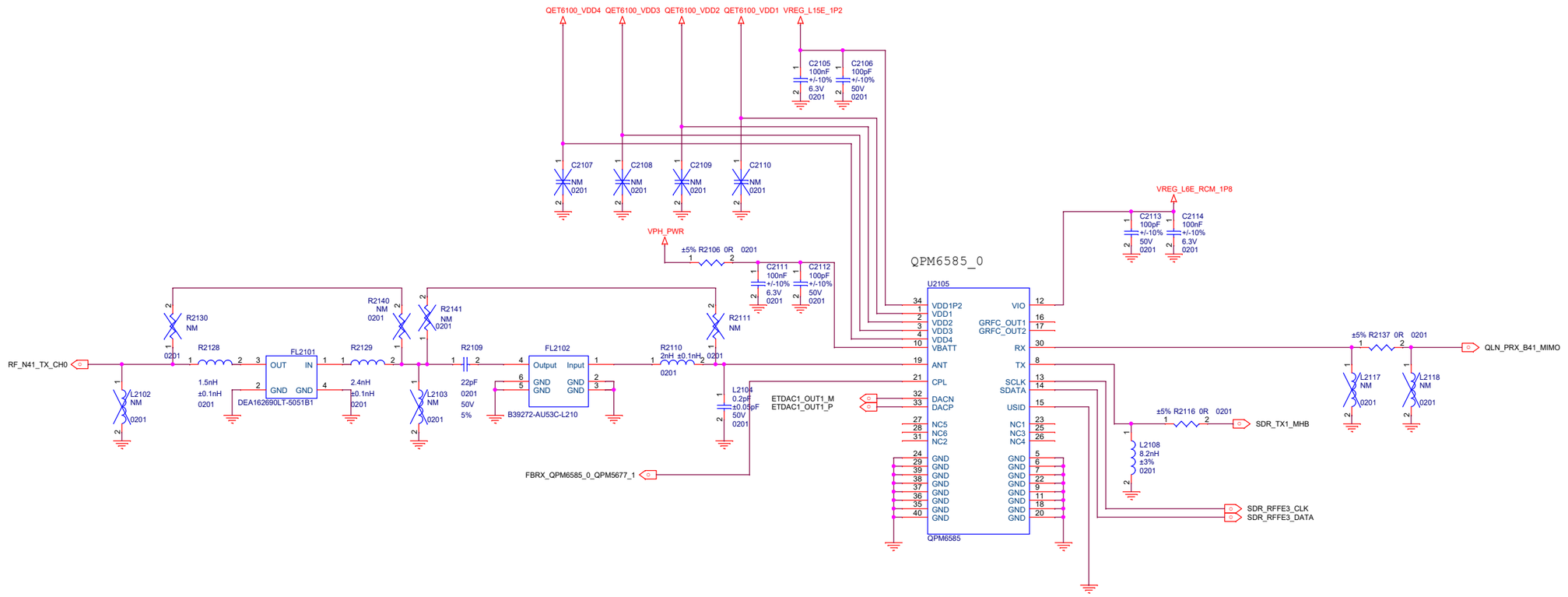

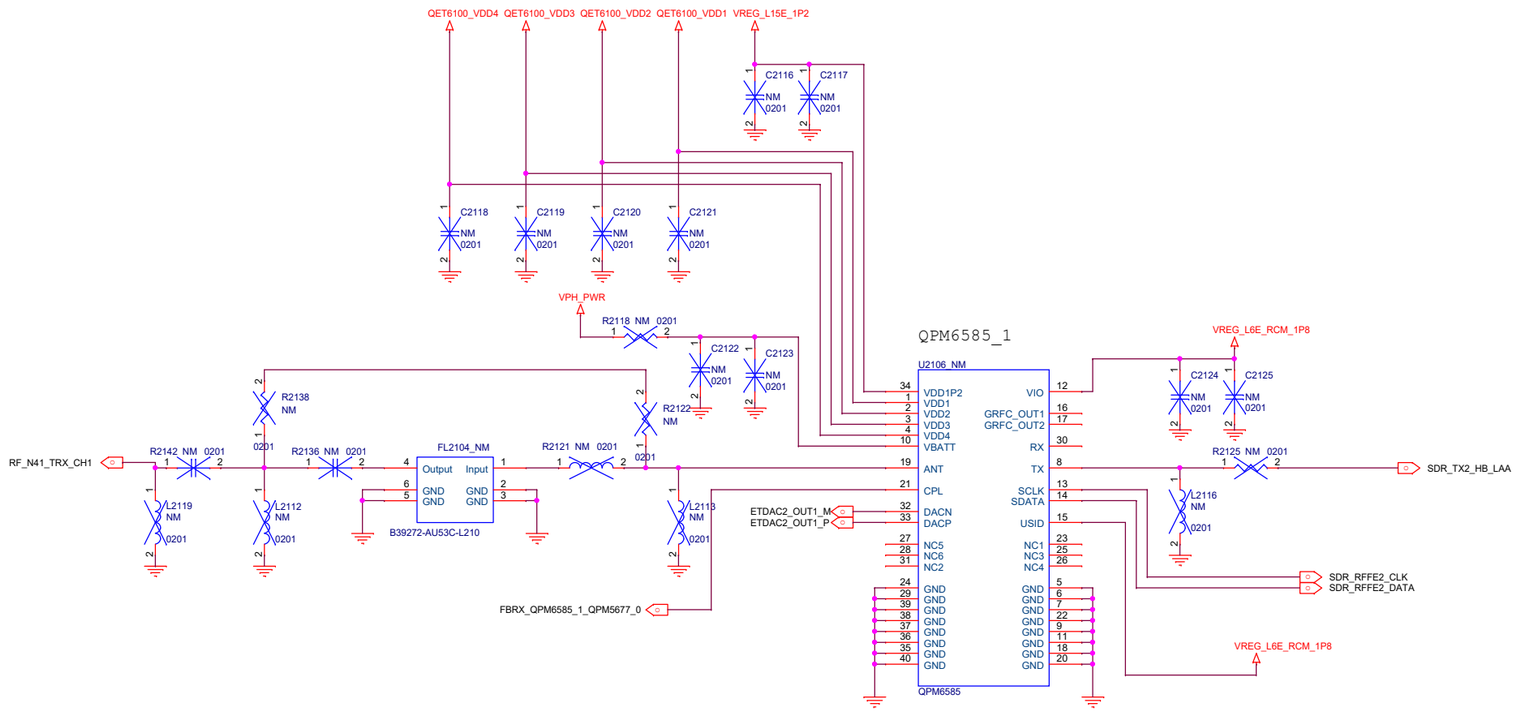

Title	F1 MAIN
Size A2	Document Number NFC
Date: Friday, November 29, 2019	Sheet

Title	F1 MAIN
Size A3	Document Number Reserved(for PA)
Date: Friday, November 29, 2019	Sheet

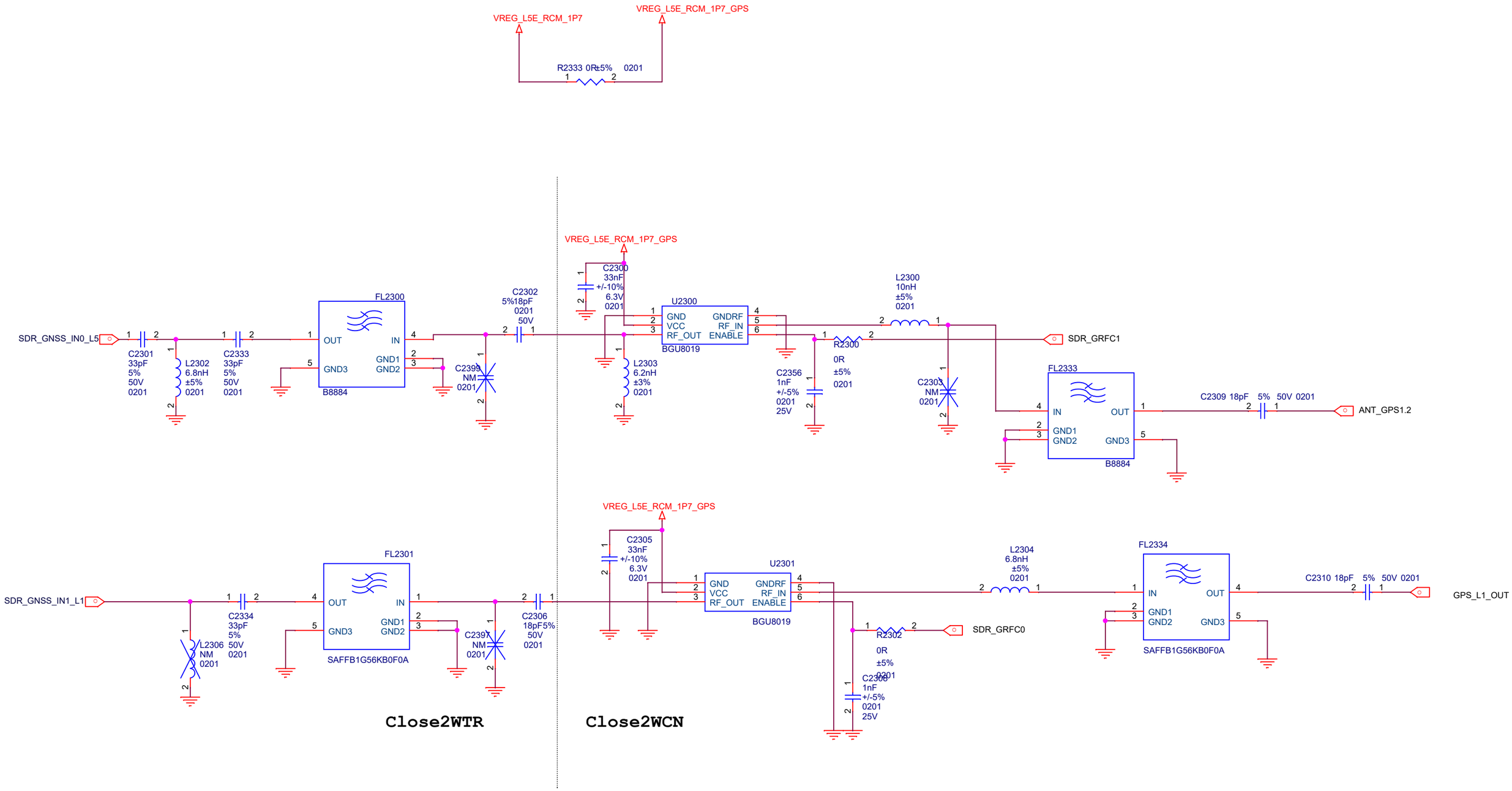

Title	F1 MAIN
Size A3	Document Number GPS
Date: Friday, November 29, 2019	Sheet 24 of 74

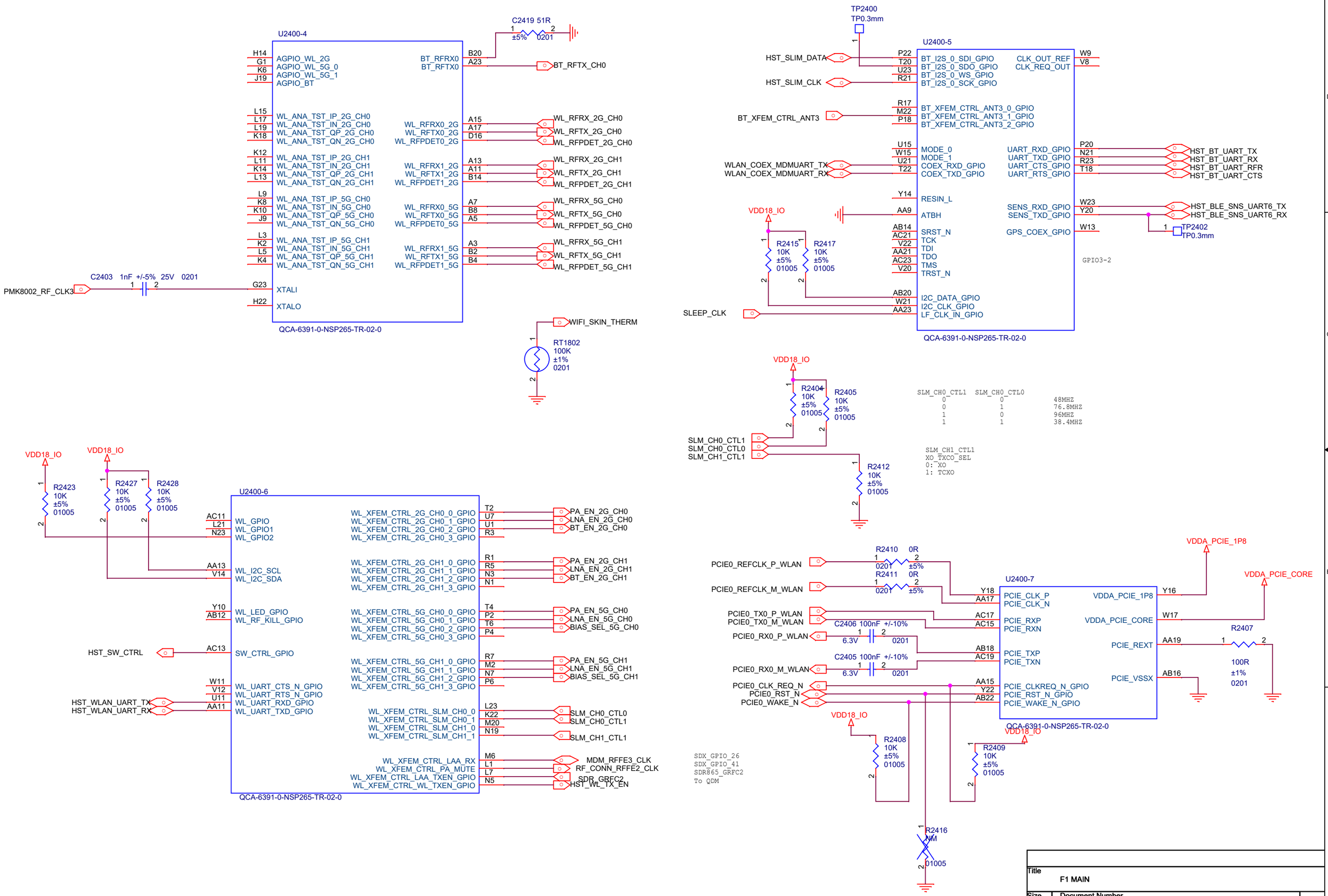

Title	F1 MAIN
Size A3	Document Number WIFI Interface
Date: Friday, November 29, 2019	Sheet 25 74

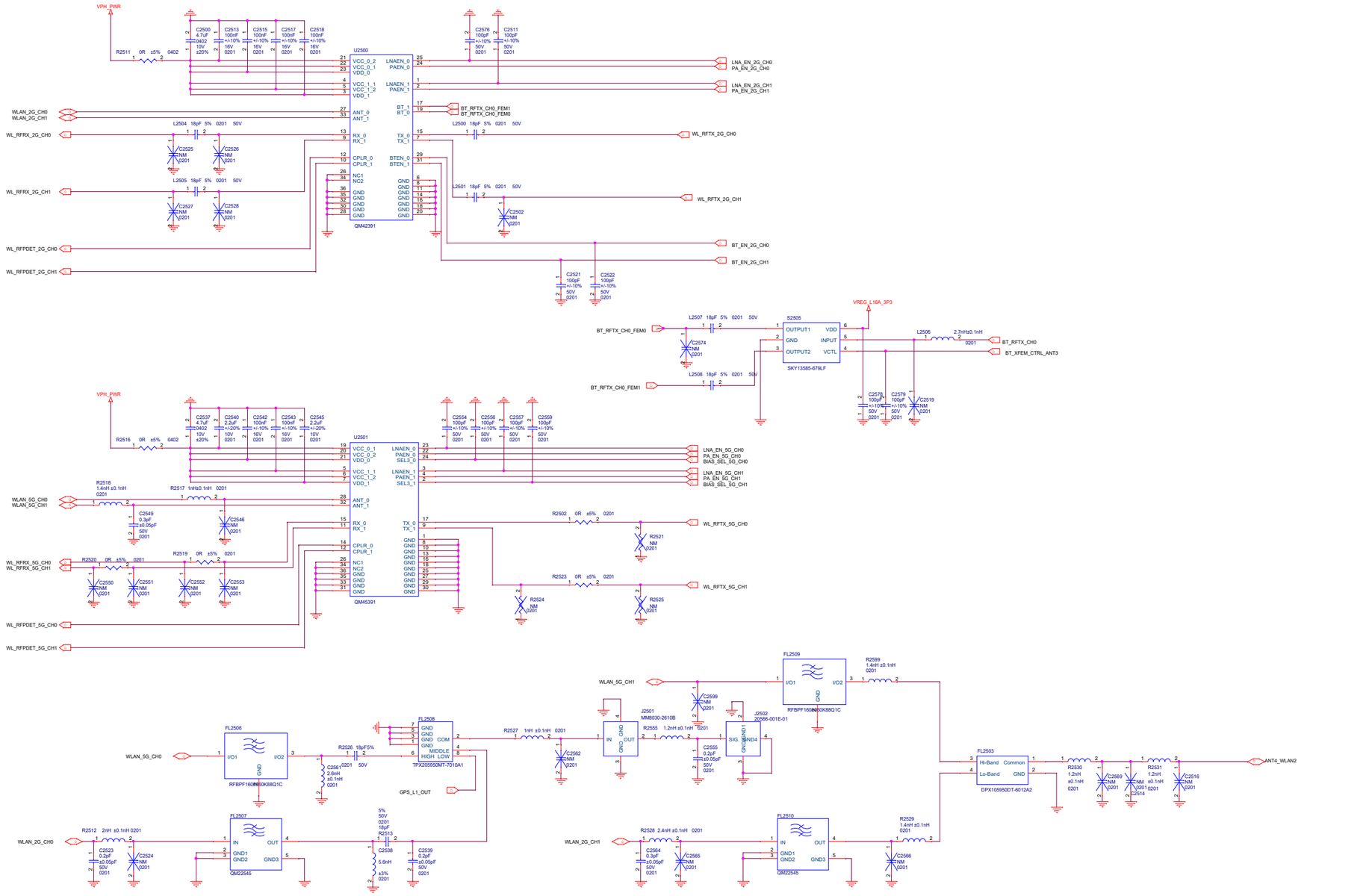

File	F1 MAIN
Size A1	Document Number Reserved(for 11ad/11ax)
Date: Friday, November 29, 2019	Sheet

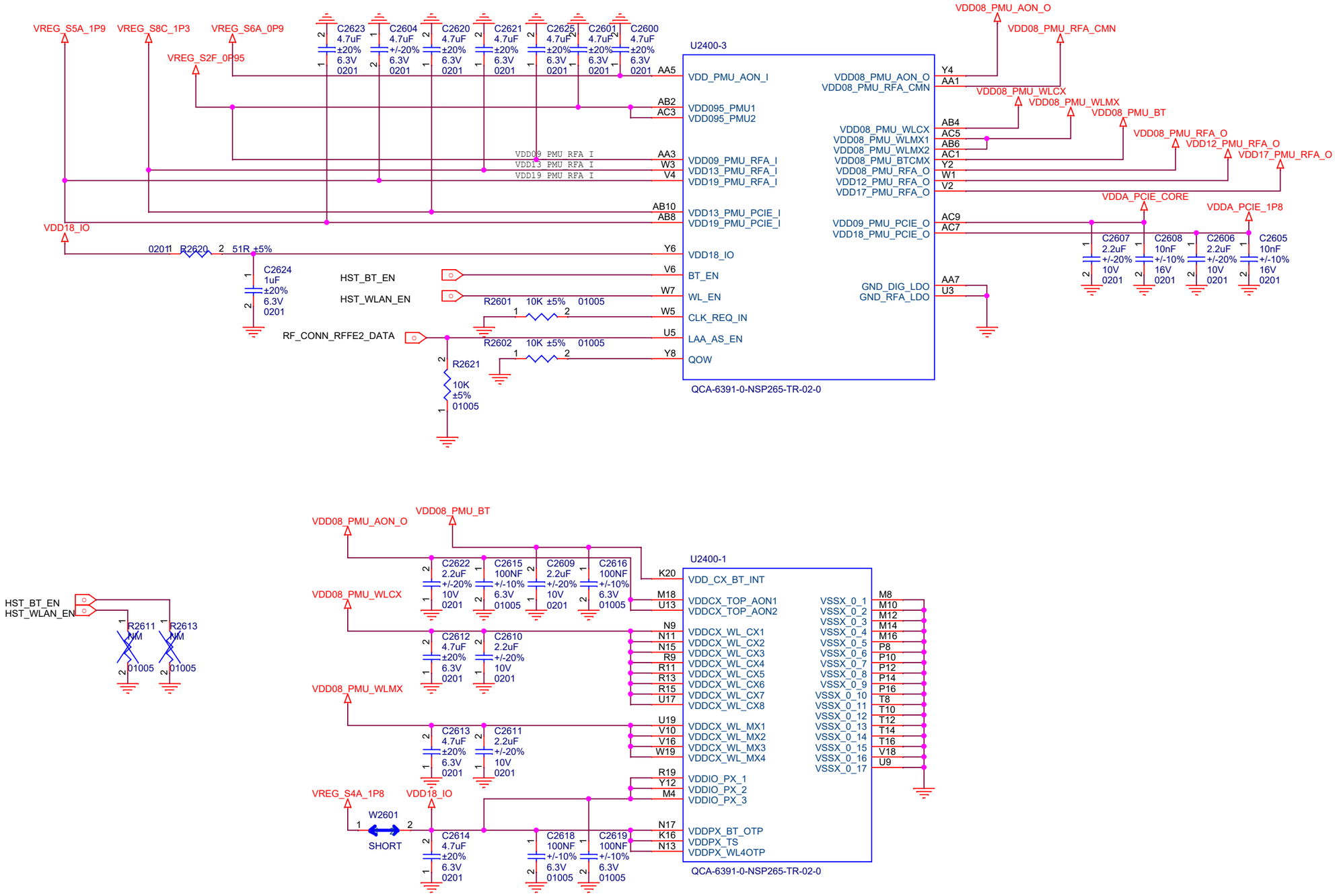

Title	F1 MAIN		
Size A3	Document Number WIFI Decouping		
Date: Friday, November 29, 2019	Sheet 27 of 74		

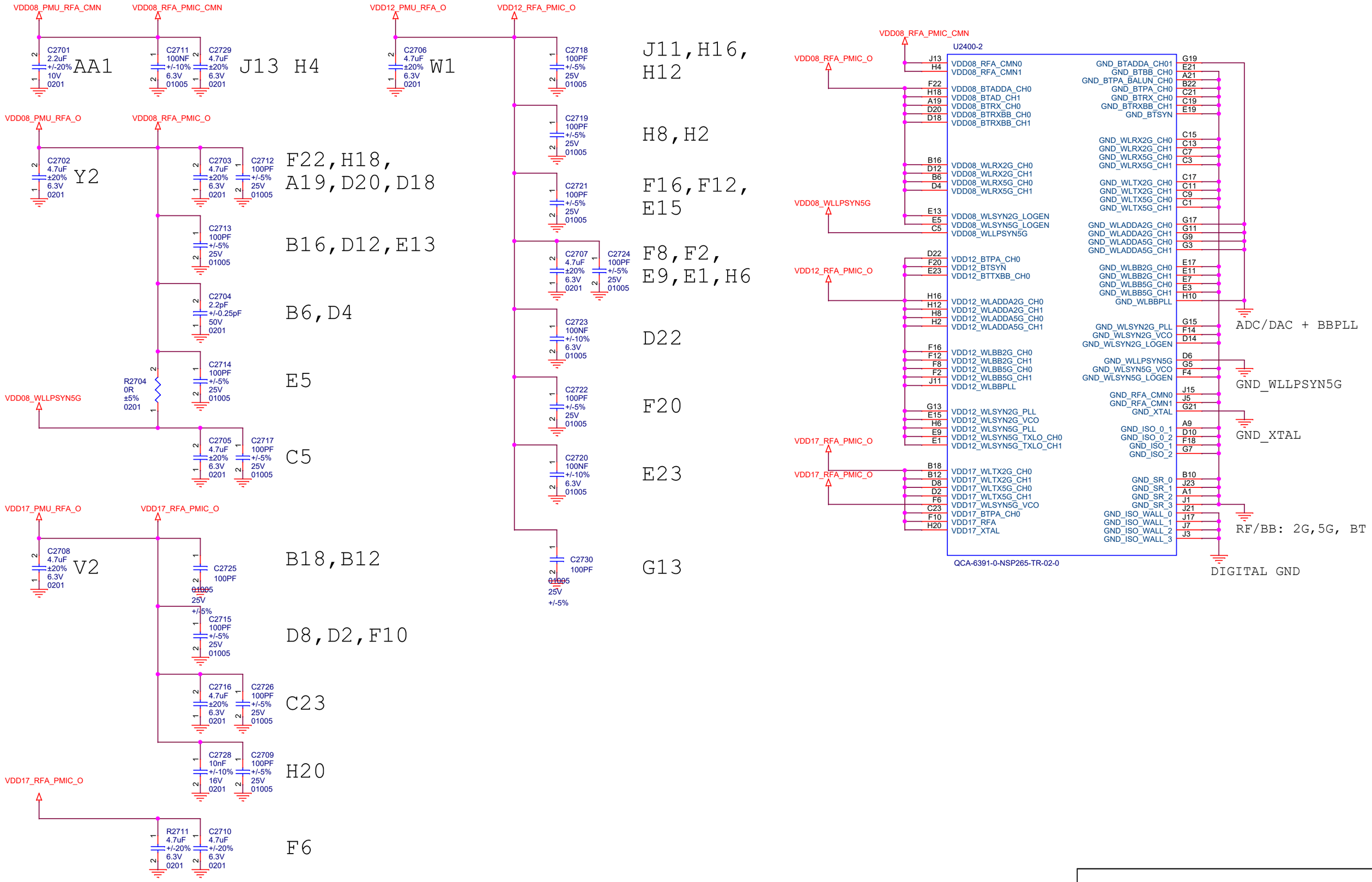

Title	F1 MAIN
Size A3	Document Number Reserved(for 11ad/11ax)
Date: Friday, November 29, 2019	Sheet 28 of 74

Title	F1 MAIN
Size A3	Document Number WIFI FEM
Date: Friday, November 29, 2019	Sheet 29 74

Title	F1 MAIN
Size A3	Document Number Reserved(for Digital FM)
Date: Friday, November 29, 2019	Sheet 30 of 74

Title	F1 MAIN
Size A3	Document Number Reserved(for Analog FM)
Date: Friday, November 29, 2019	Sheet 31 74

We use current SM8250 symbol as LP5 PKG, and it can be compatible with LP4x PKG

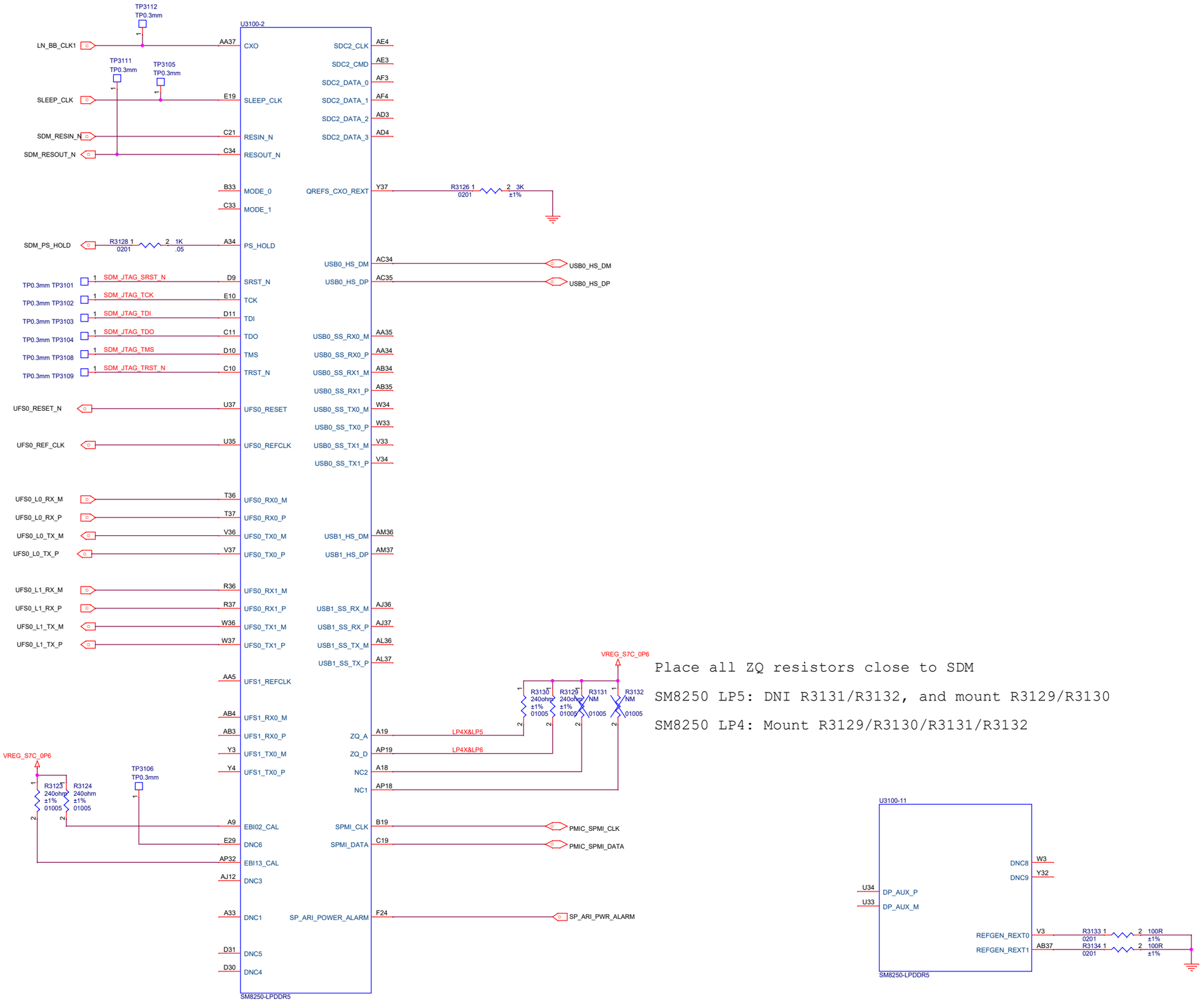

Place all ZQ resistors close to SDM

SM8250 LP5: DNI R3131/R3132, and mount R3129/R3130

SM8250 LP4: Mount R3129/R3130/R3131/R3132

Title	F1 MAIN
Size A2	Document Number SDM855 Control
Date: Friday, November 29, 2019	Sheet

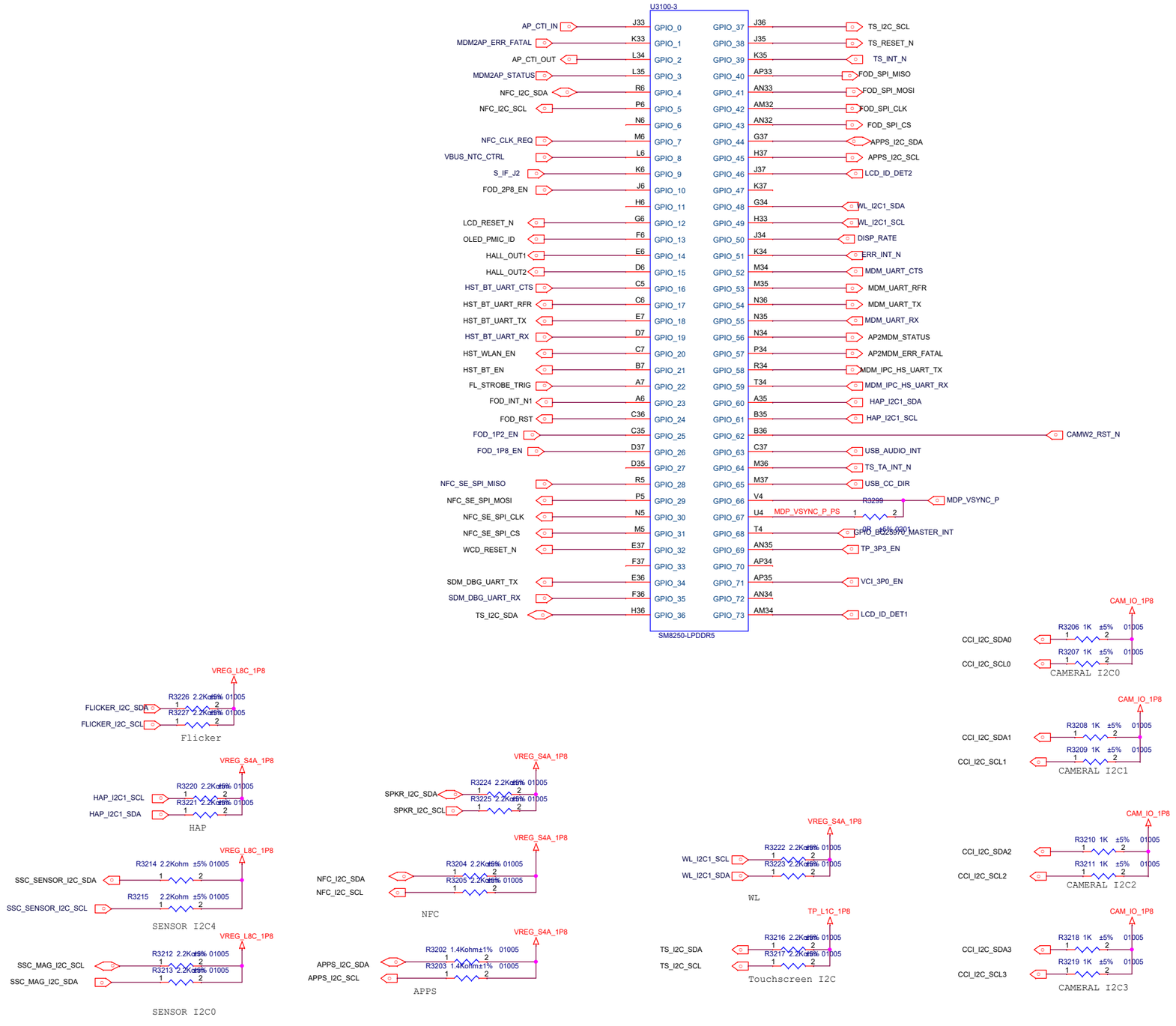

Title	F1 MAIN
Size A2	Document Number SDM855 GPIO-1
Date: Friday, November 29, 2019	Sheet 33 74

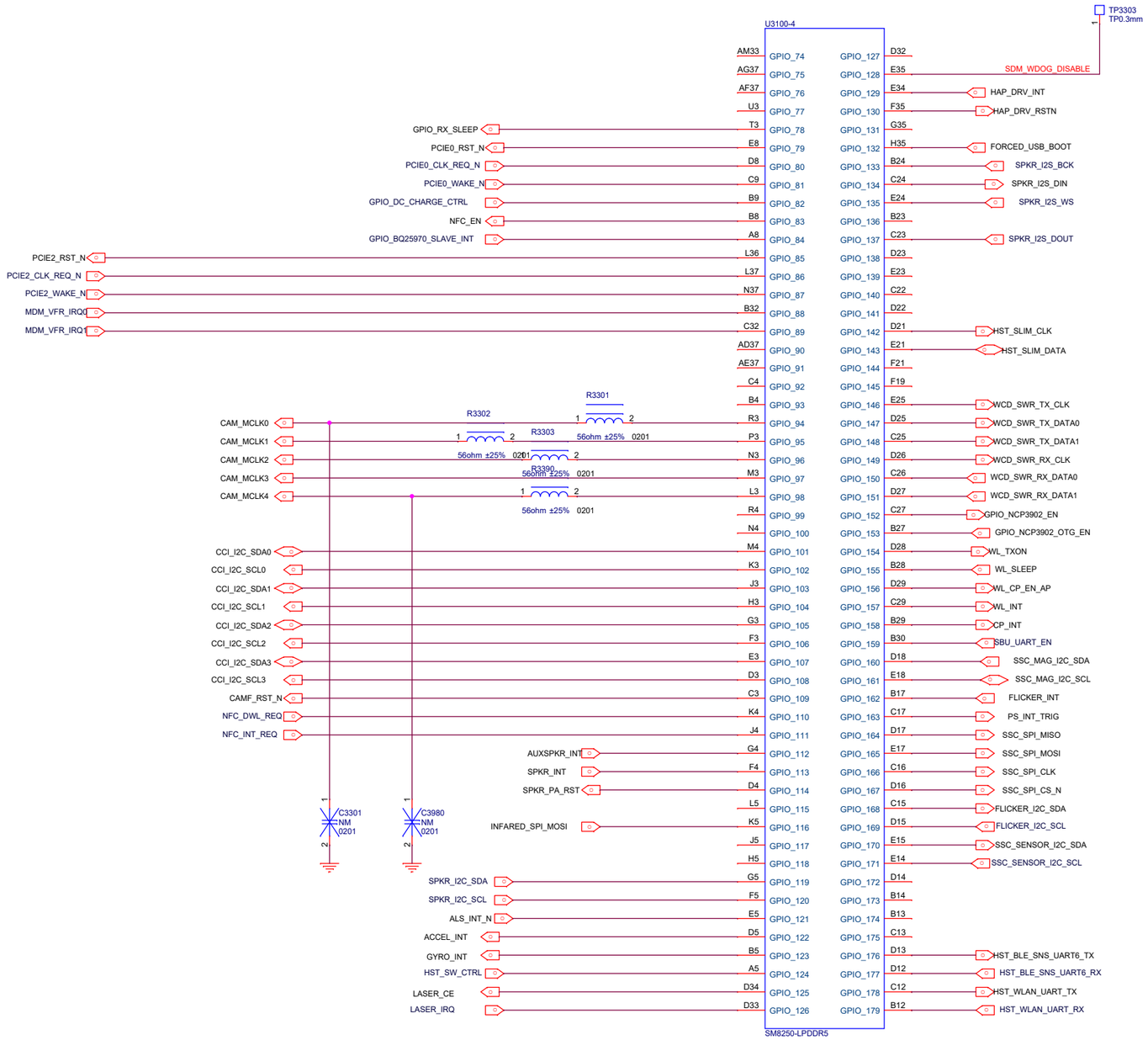

Title	F1 MAIN
Size A2	Document Number SDM855 GPIO-2
Date: Friday, November 29, 2019	Sheet

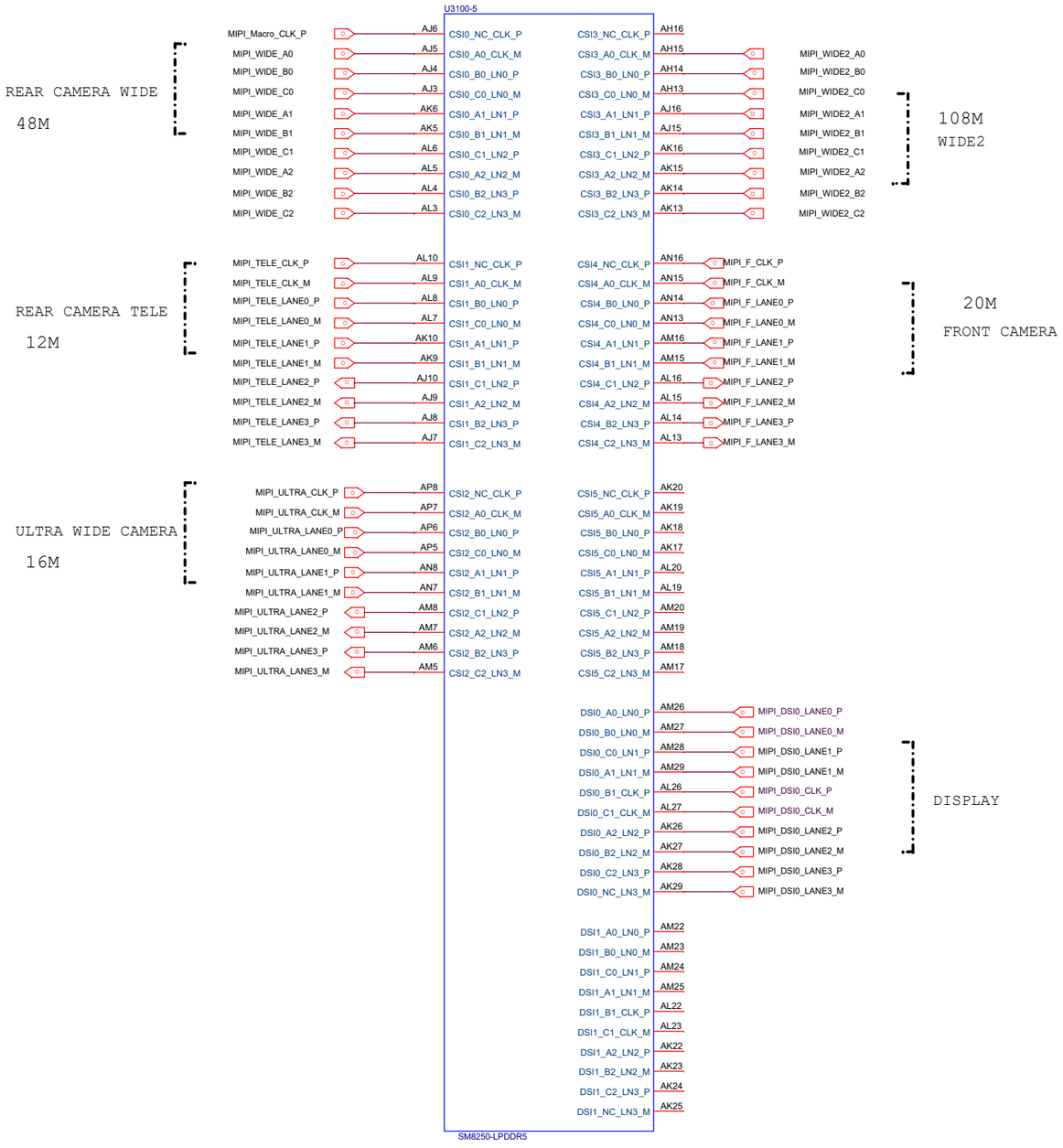

Title	F1 MAIN		
Size A2	Document Number SDM855 MIPI		
Date: Friday, November 29, 2019	Sheet 35	74	

Title	F1 MAIN		
Size A3	Document Number Reserved(for MIPI)		
Date: Friday, November 29, 2019	Sheet 36	74	

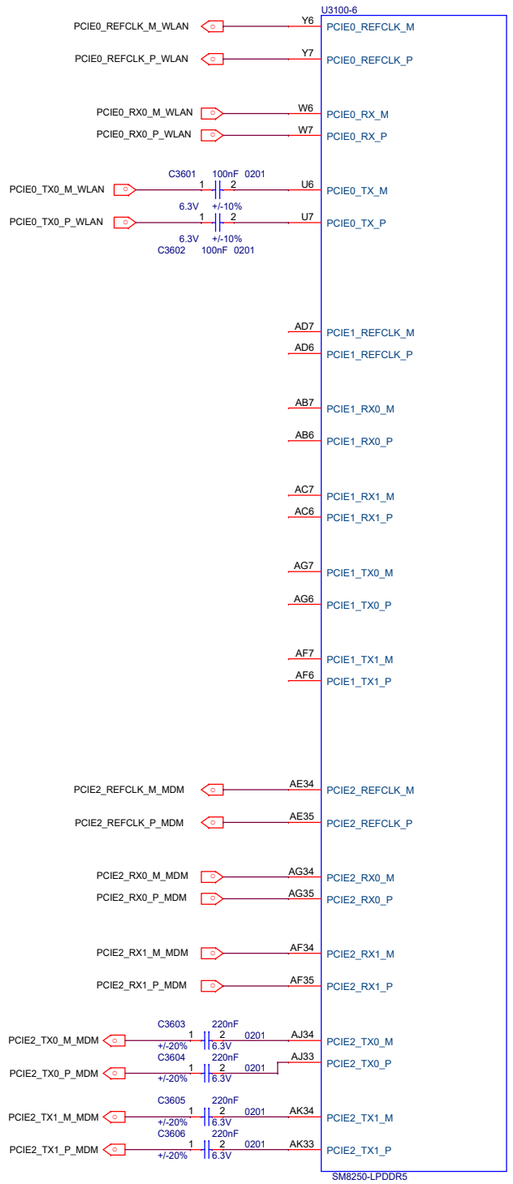

Title	F1 MAIN	
Size A2	Document Number SDM855 RF INTF	
Date: Friday, November 29, 2019	Sheet	

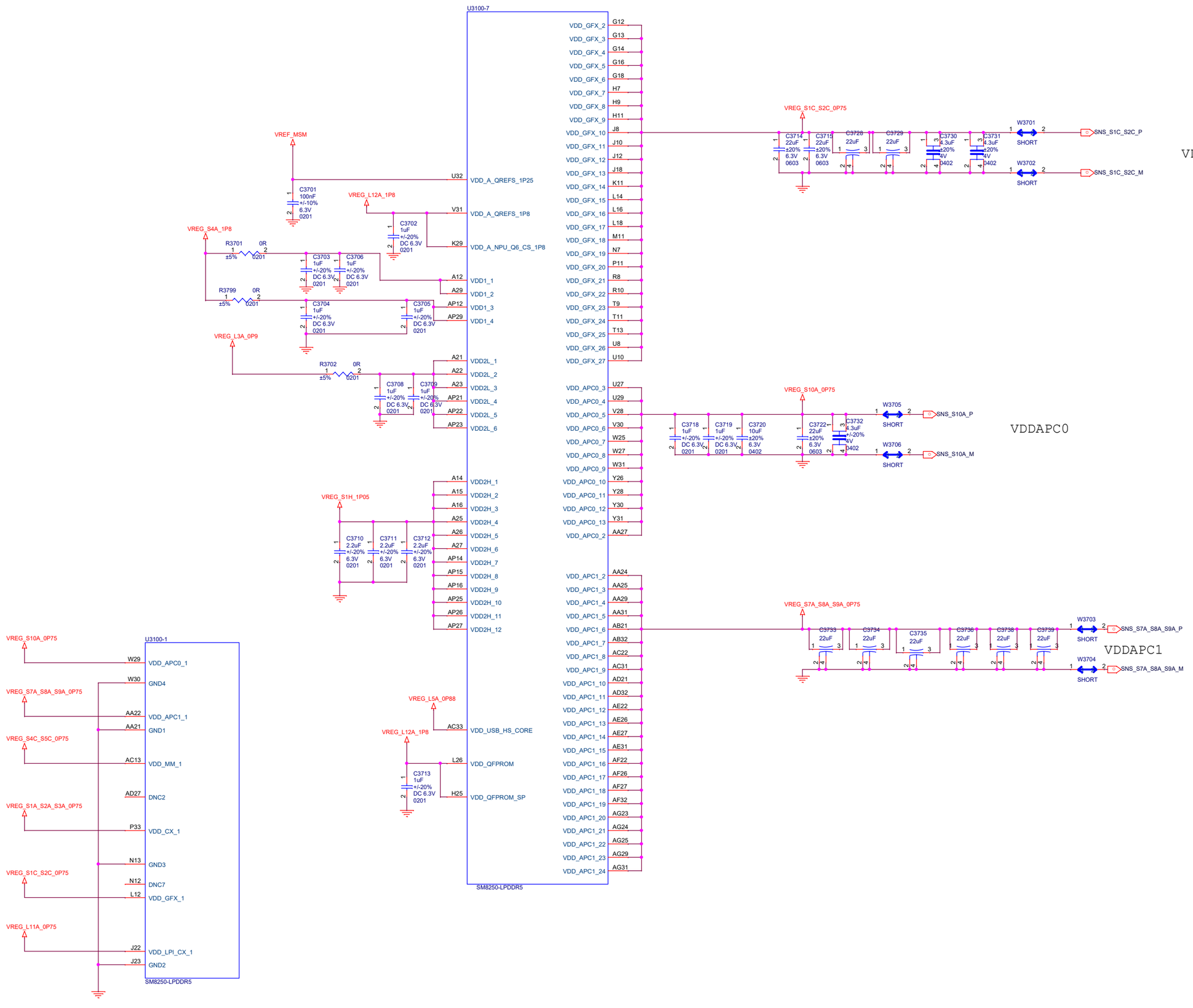

Title	F1 MAIN
Size A2	Document Number SDM855 PWR1
Date: Friday, November 29, 2019	Sheet

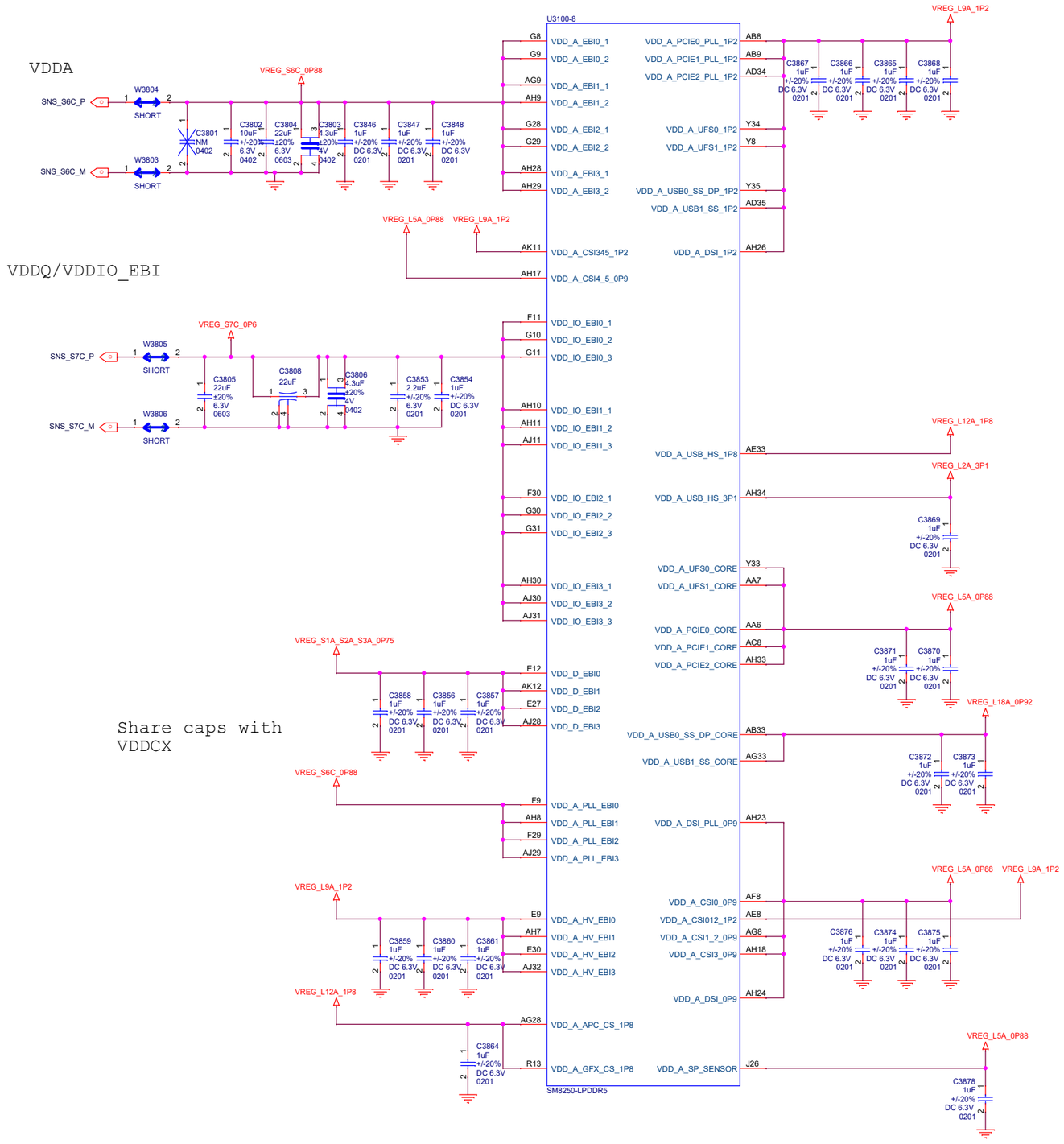

Title	F1 MAIN
Size A2	Document Number SDM855 PWR2
Date: Friday, November 29, 2019	Sheet 39 74

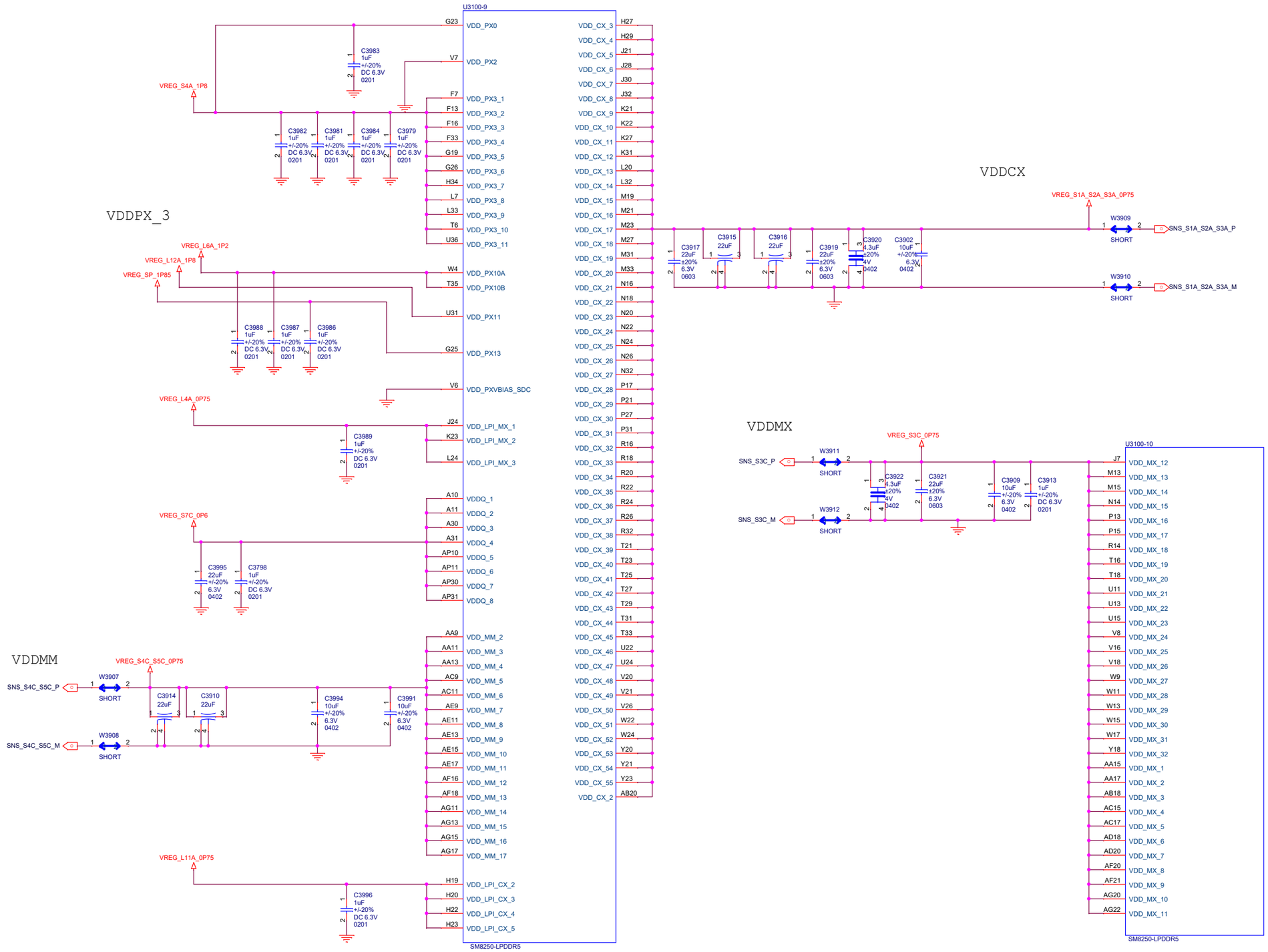

Title	F1 MAIN
Size A2	Document Number SDM855 PWR3
Date: Friday, November 29, 2019	Sheet

Title	F1 MAIN
Size A3	Document Number SDM855 PWR4
Date: Friday, November 29, 2019	Sheet 41 74

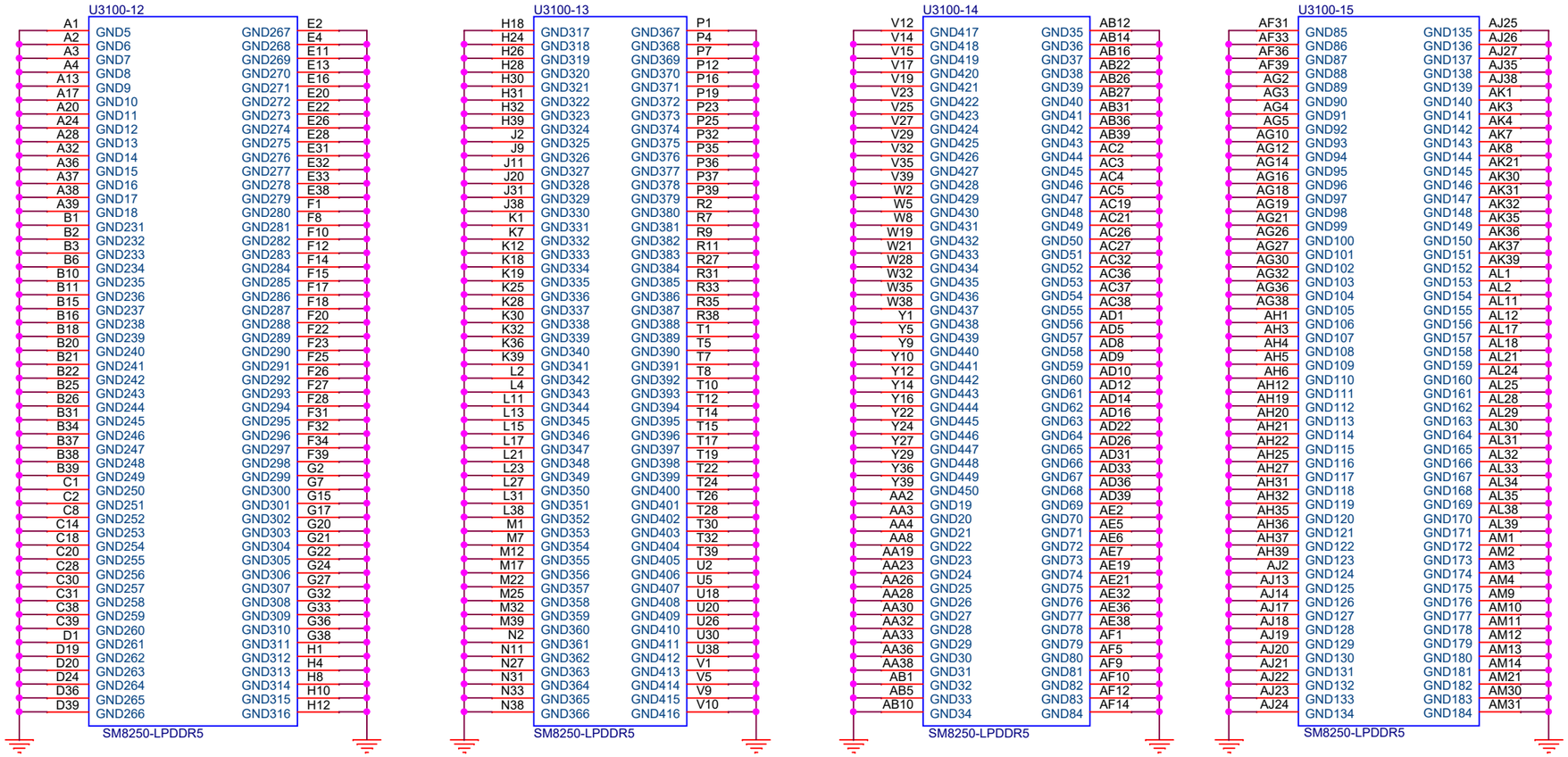

Title	F1 MAIN
Size A3	Document Number SDM855 GND
Date: Friday, November 29, 2019	Sheet 42 74

Note: Refer to 80-VP447-10 for XO Layout App Note.

Layout Note:
No trace shall be present in at-least two immediate layers below XTAL.
Route XTAL_IN and XTAL_OUT traces on surface layer only, with length between 3mm and 10mm.

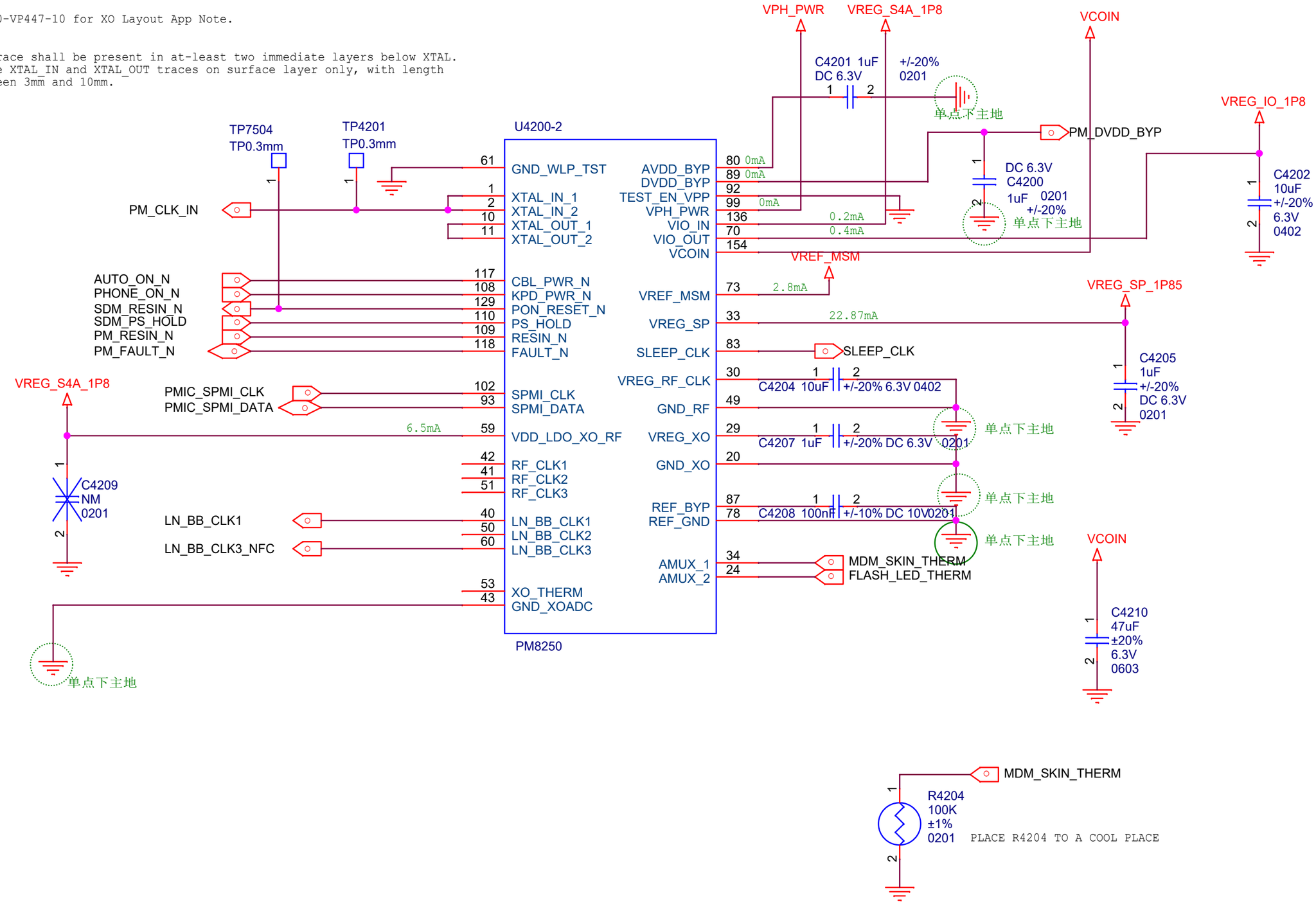

Title	F1 MAIN	
Size A4	Document Number PM855 XO&CTRL	
Date: Friday, November 29, 2019	Sheet 43	74

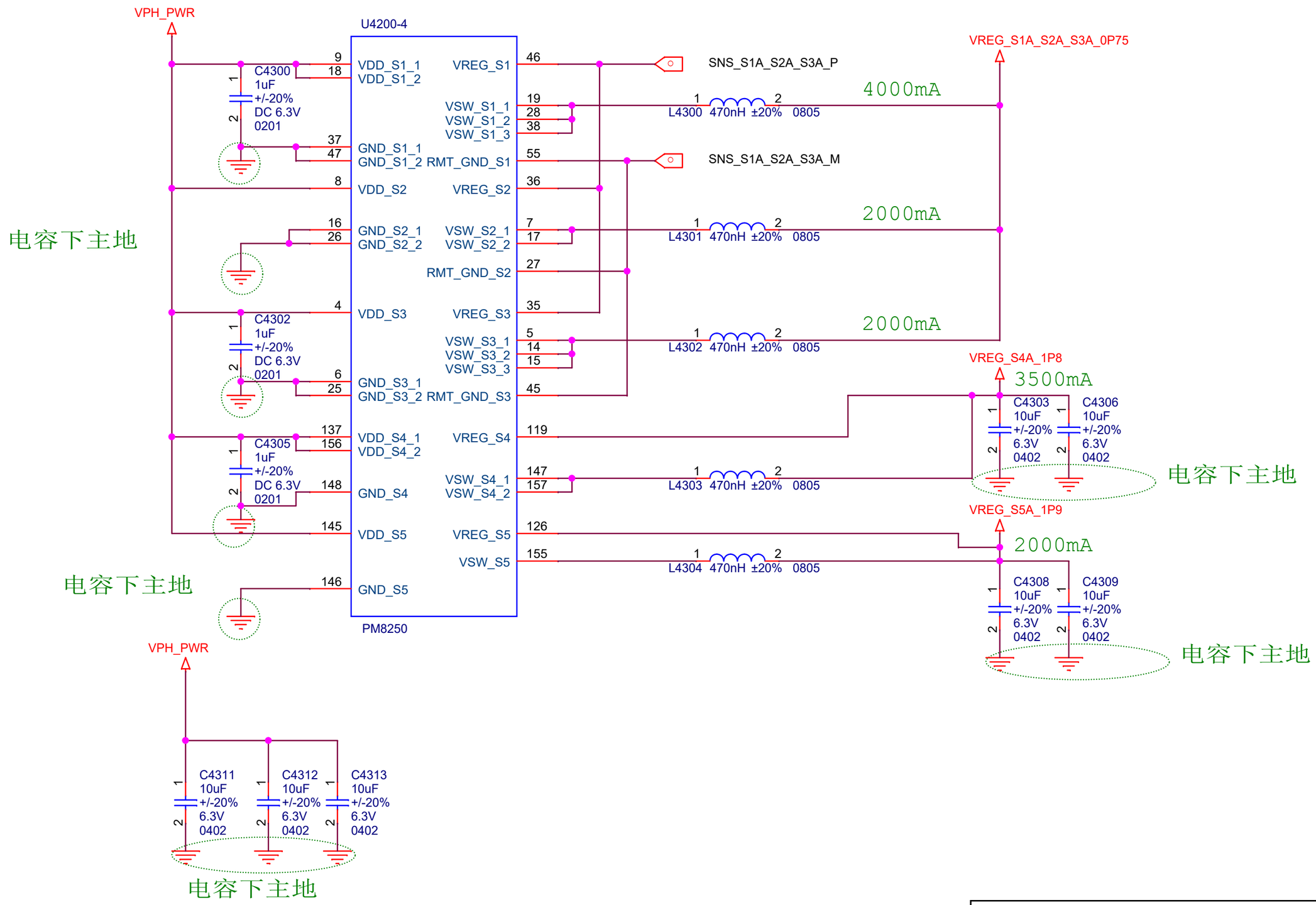

Title	F1 MAIN
Size A4	Document Number PM855 BUCK CONVERTER1
Date: Friday, November 29, 2019	Sheet 44

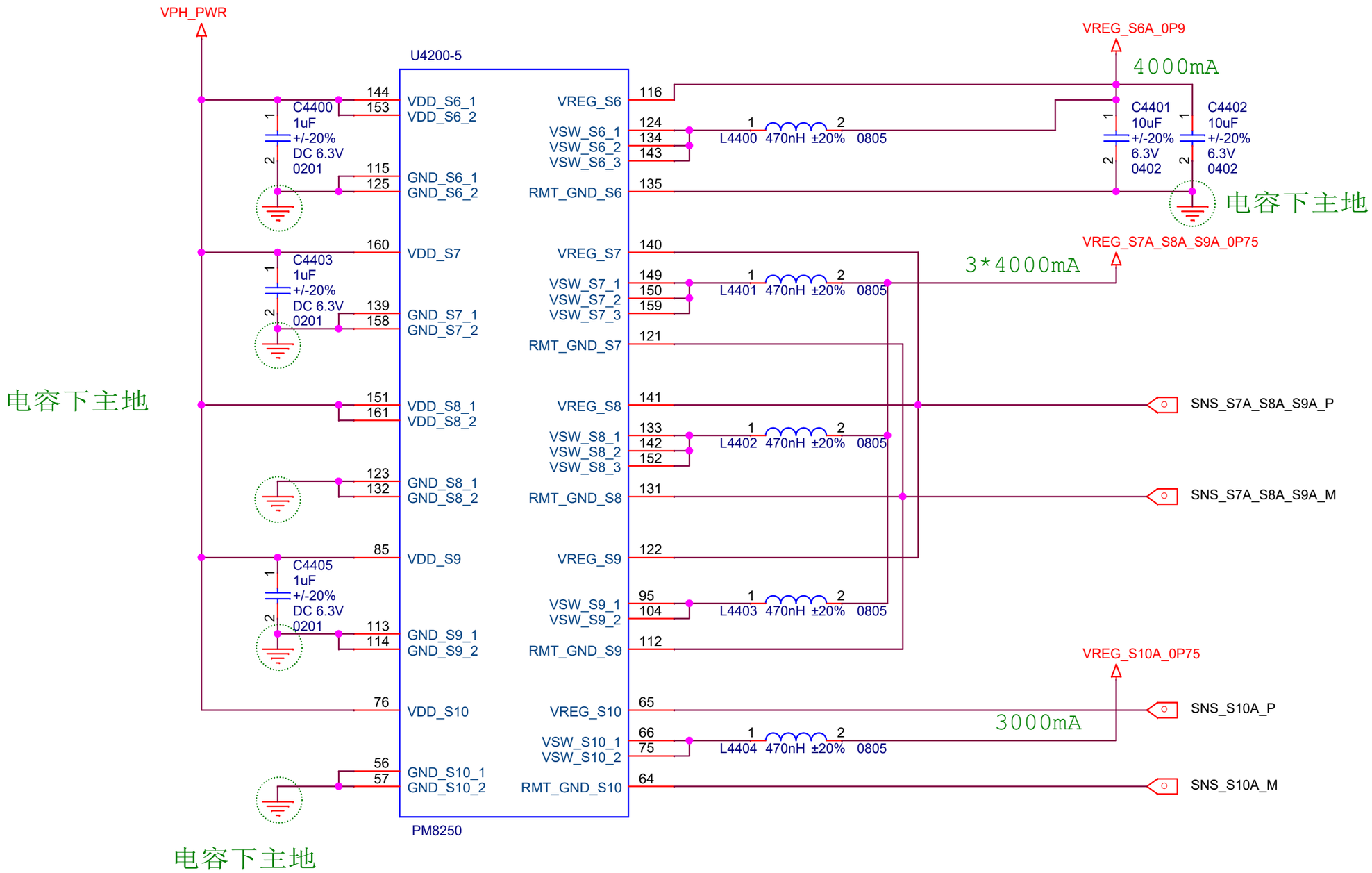

Title	F1 MAIN
Size A4	Document Number PM855 BUCK CONVERTER2
Date: Friday, November 29, 2019	Sheet

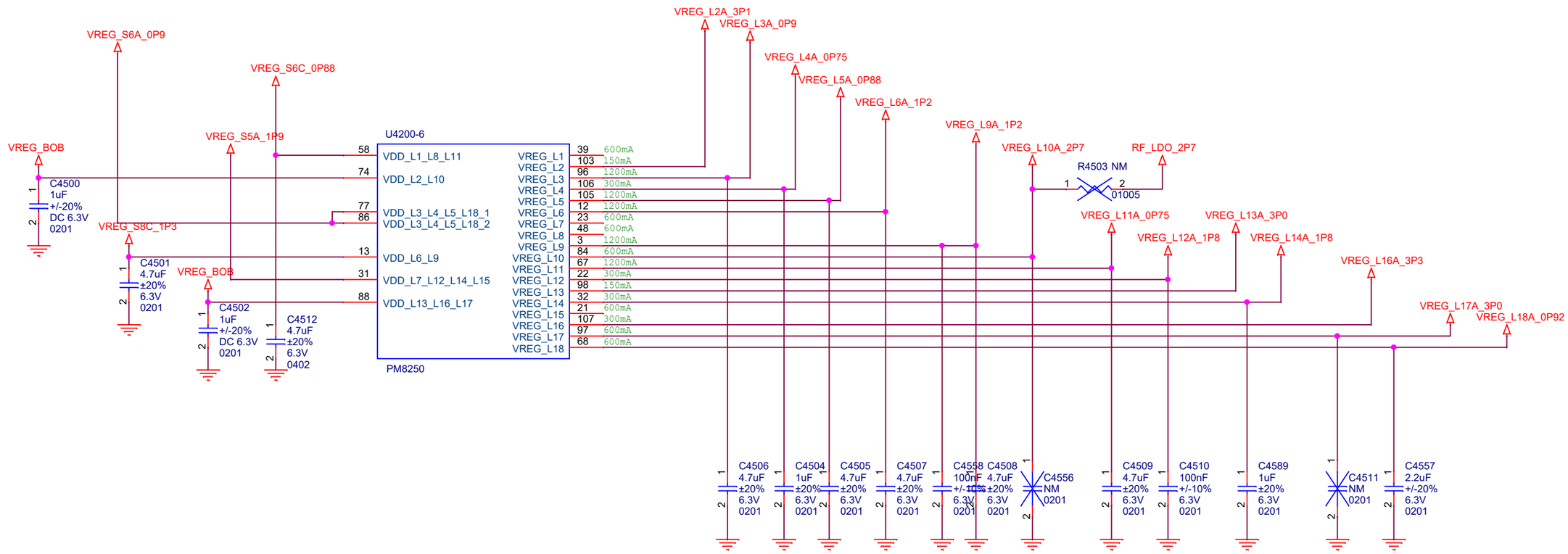

Title	F1 MAIN
Size A3	Document Number PM855 LDOs
Date: Friday, November 29, 2019	Sheet

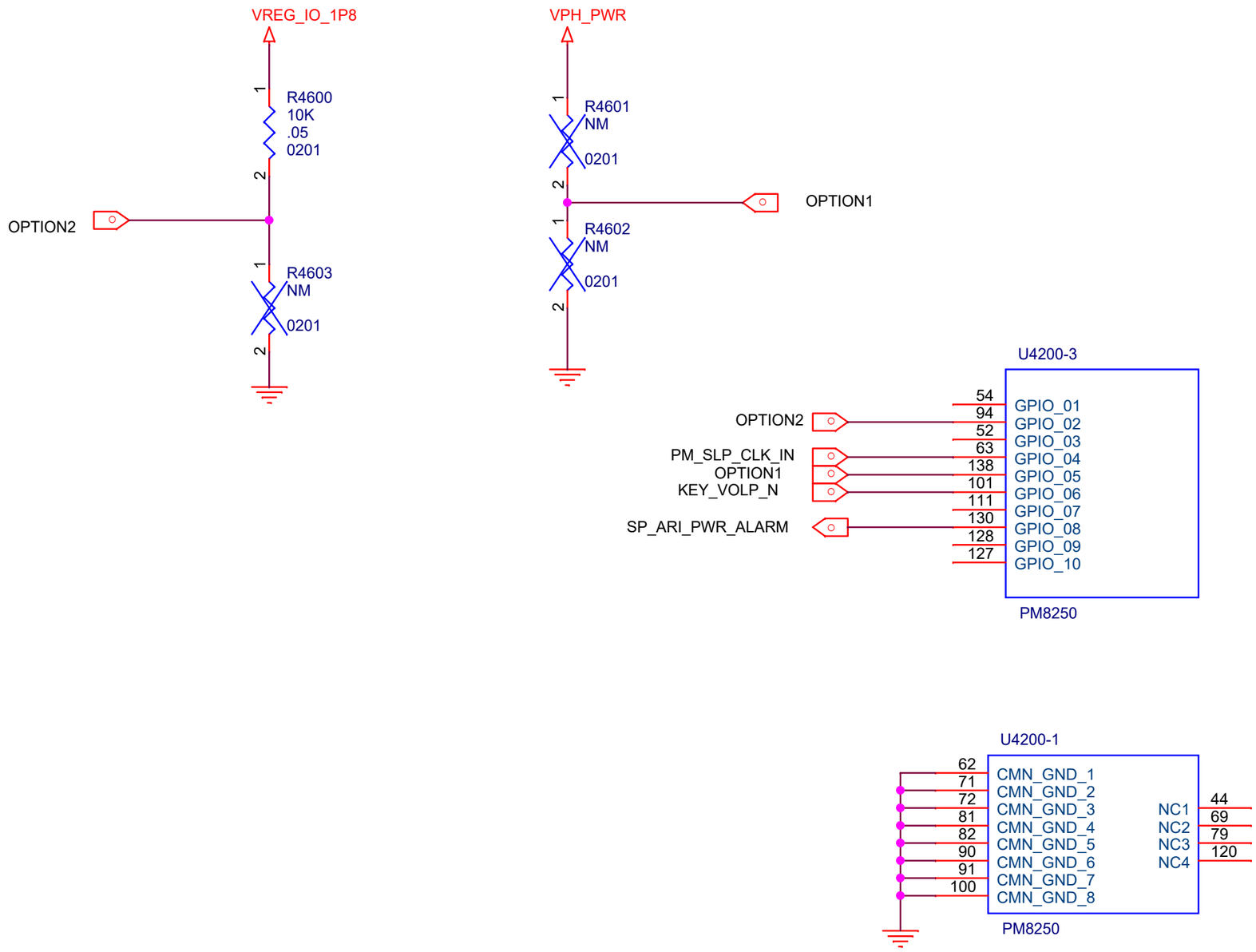

Title	F1 MAIN		
Size A4	Document Number PM855 GPIO&GND		
Date: Friday, November 29, 2019		Sheet 47	74

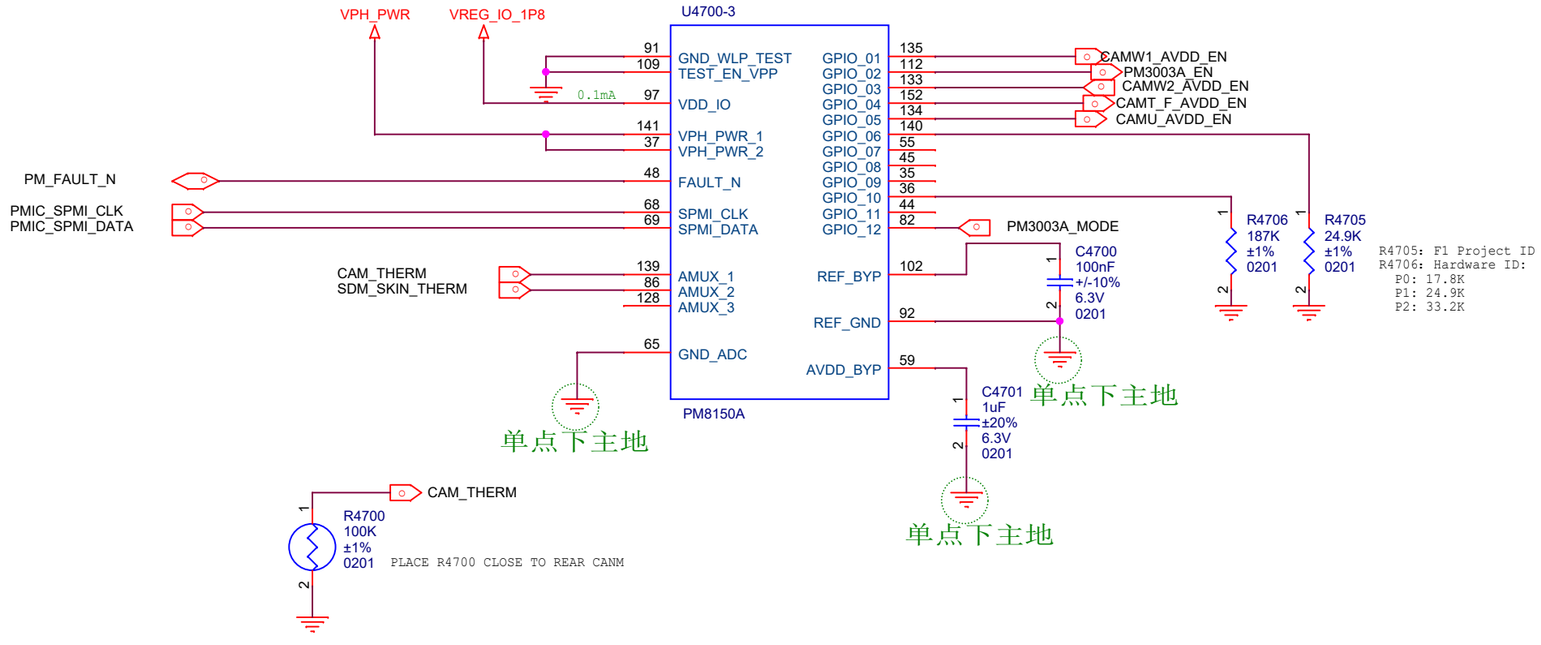

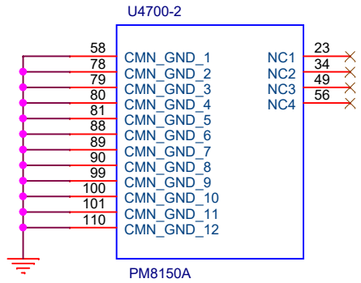

Title	F1 MAIN		
Size A3	Document Number PM855A CTRL&GND		
Date: Friday, November 29, 2019	Sheet 48	74	

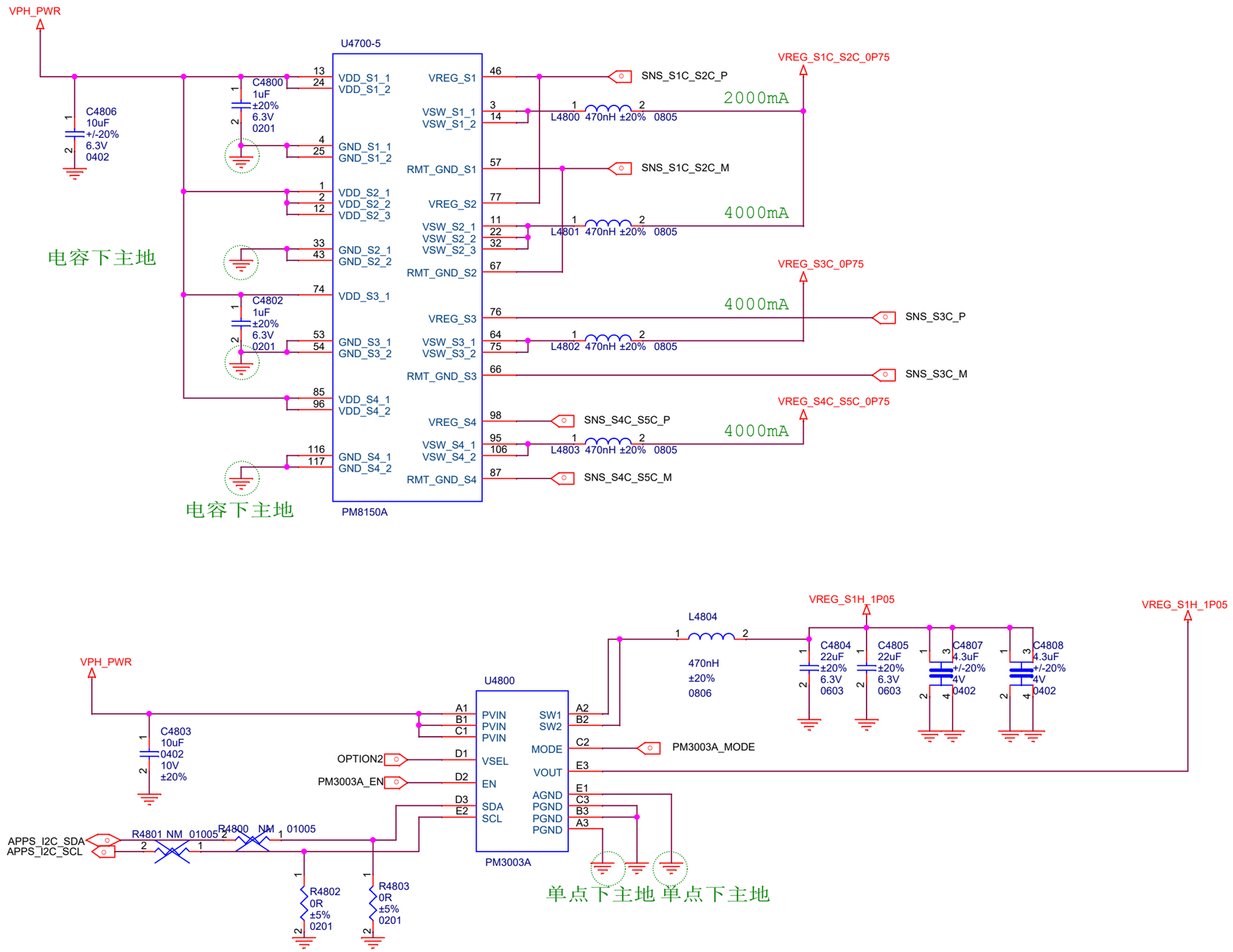

Title	F1 MAIN
Size A3	Document Number PM855A BUCK CONVERTER1
Date: Friday, November 29, 2019	Sheet 49 74

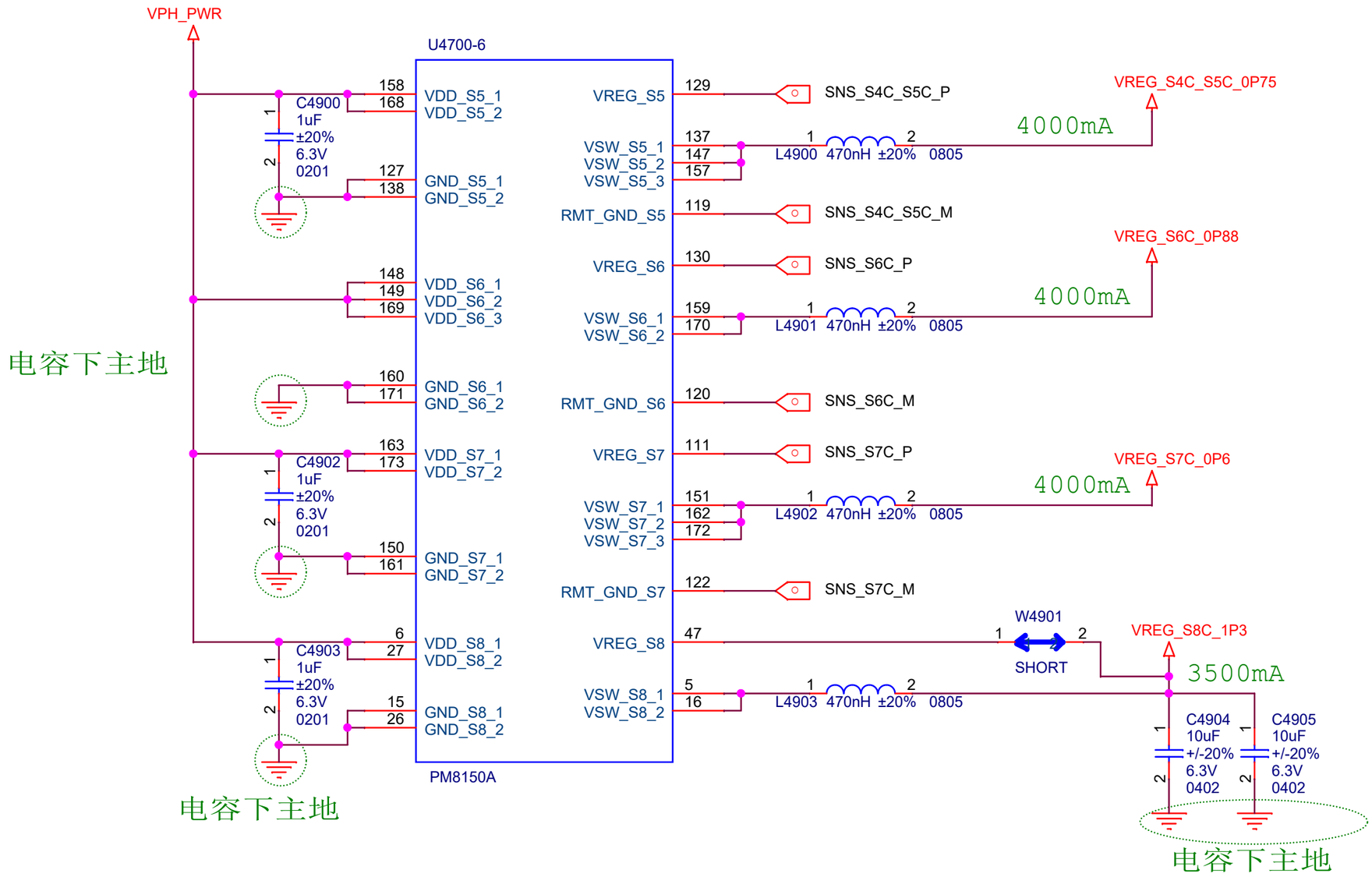

Title	F1 MAIN
Size A4	Document Number PM855A BUCK CONVERTER2
Date: Friday, November 29, 2019	Sheet

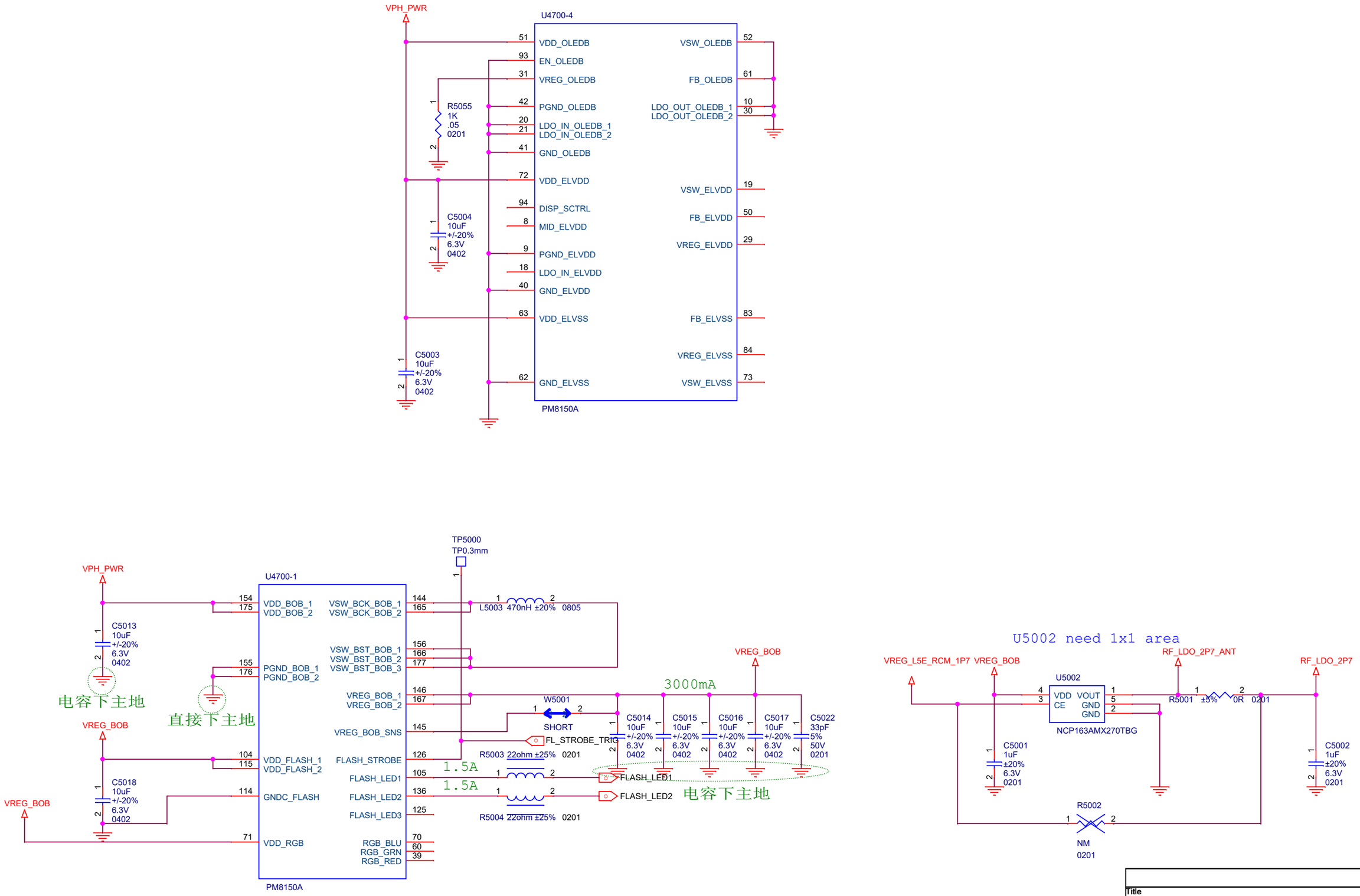

Title	F1 MAIN
Size A3	Document Number PM855A AMOLED&BOB&FLASH
Date: Friday, November 29, 2019	Sheet

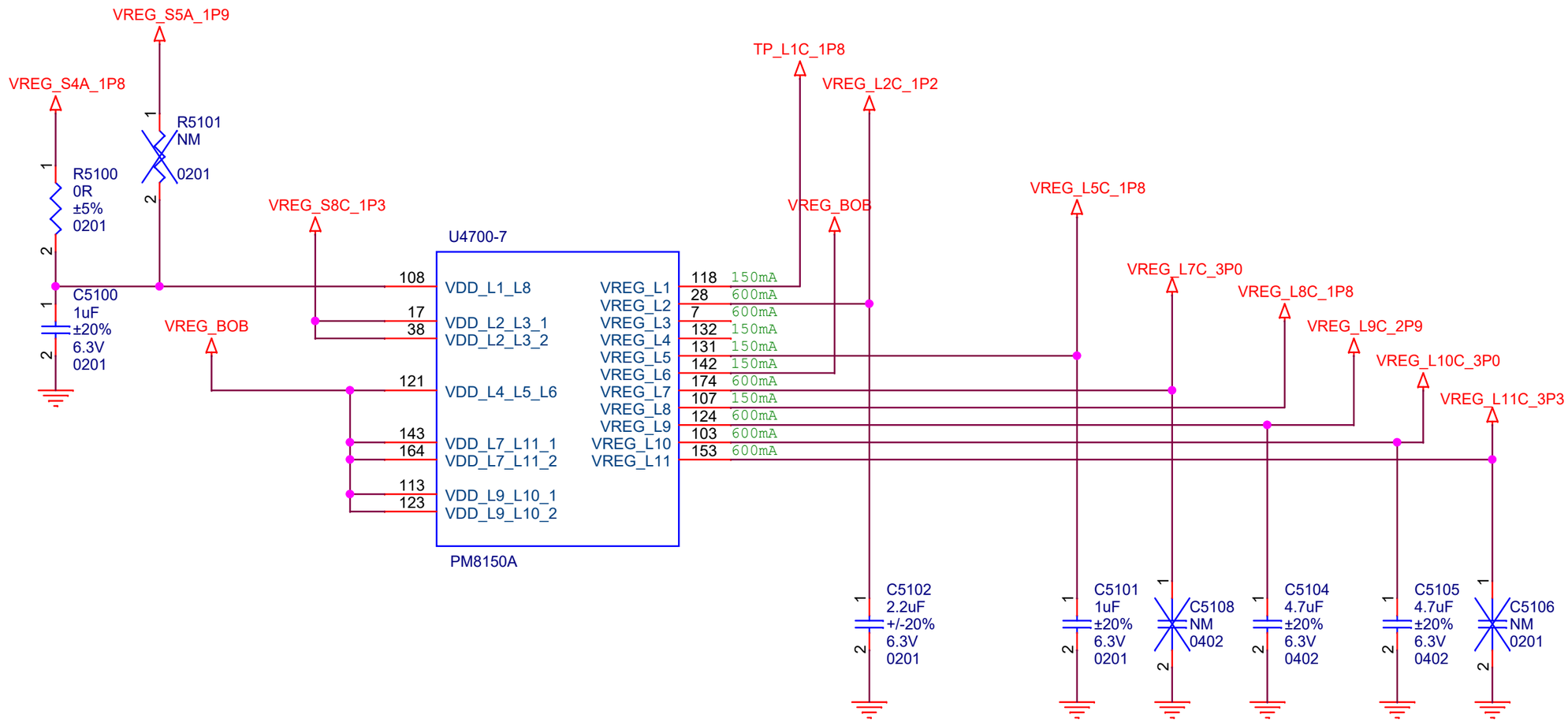

Title	F1 MAIN	
Size A4	Document Number PM855A LDOs	
Date: Friday, November 29, 2019	Sheet 52 of 74	

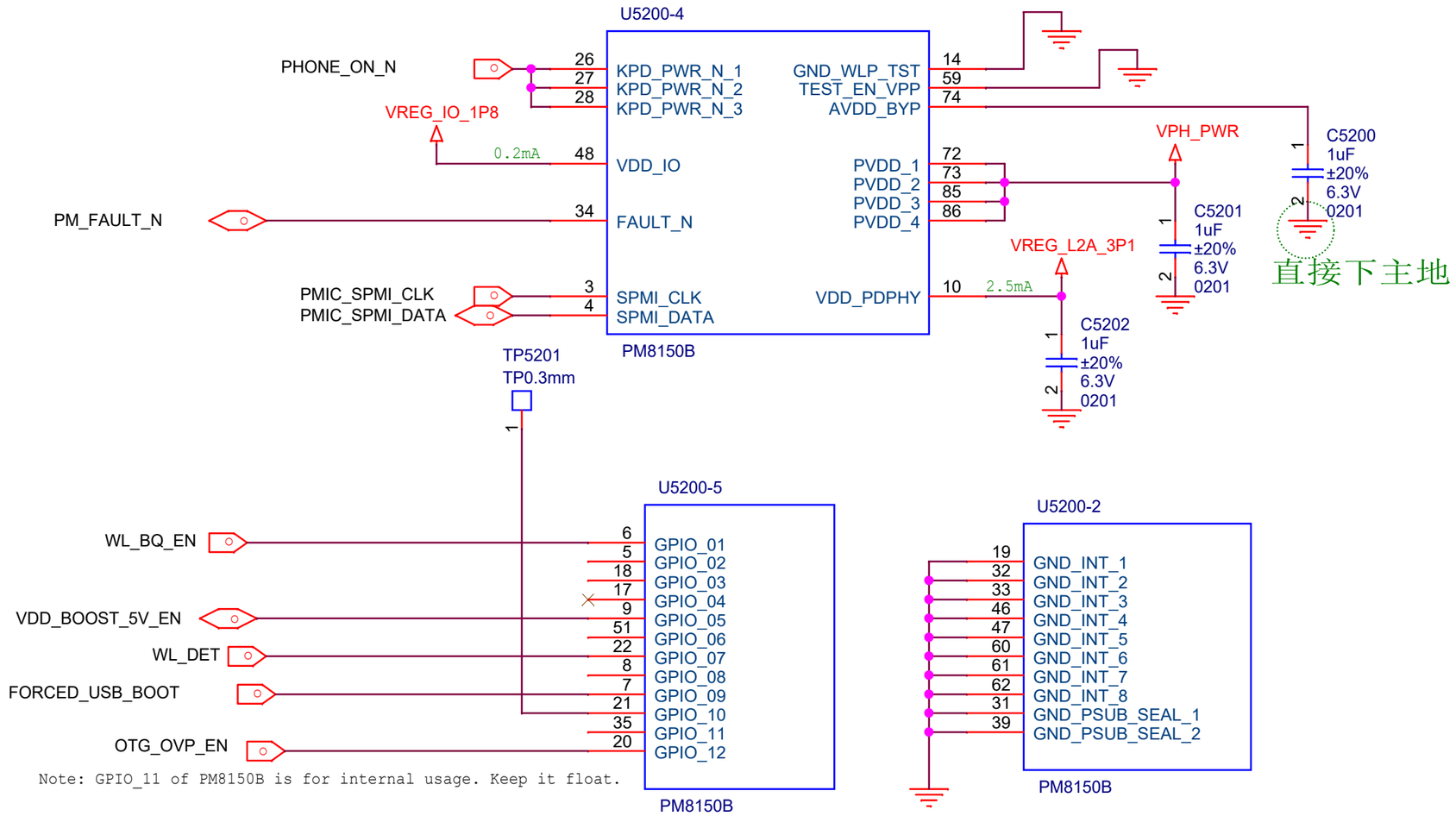

Note: GPIO_11 of PM8150B is for internal usage. Keep it float.

Note: GPIO_04 and GPIO_11 of PM8150B are for internal usage. Keep them float.
Keep GPIO_03 of PM8150B float. Don't use it for other purpose.
GPIO_06 of PM8150B is dedicated for SMB_STAT. Don't use it for other purpose.

Title	F1 MAIN
Size A4	Document Number PM855B CTRL&GND
Date: Friday, November 29, 2019	Sheet 53 of 74

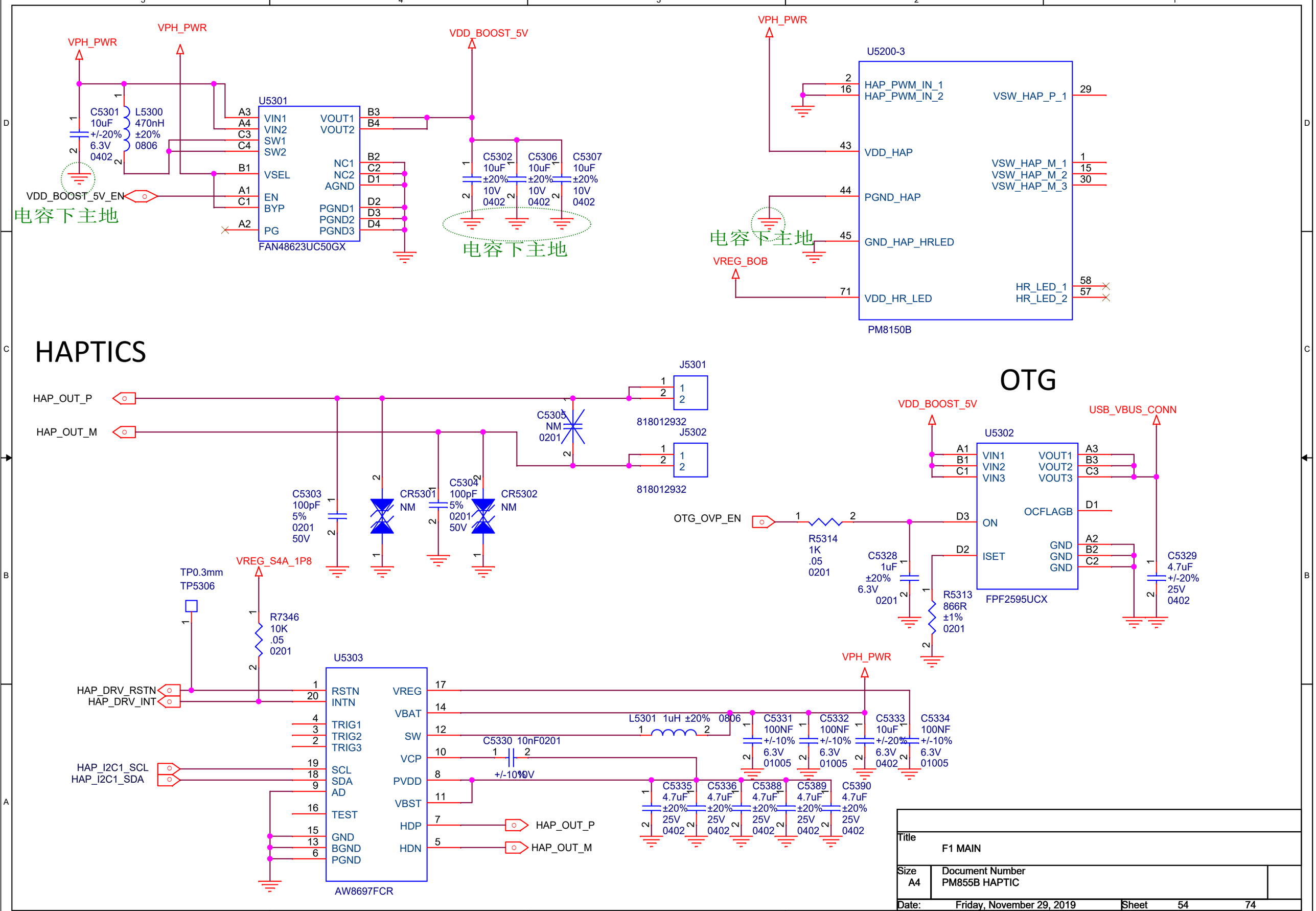

Title	F1 MAIN
Size A4	Document Number PM855B HAPTIC
Date: Friday, November 29, 2019	Sheet 54 74

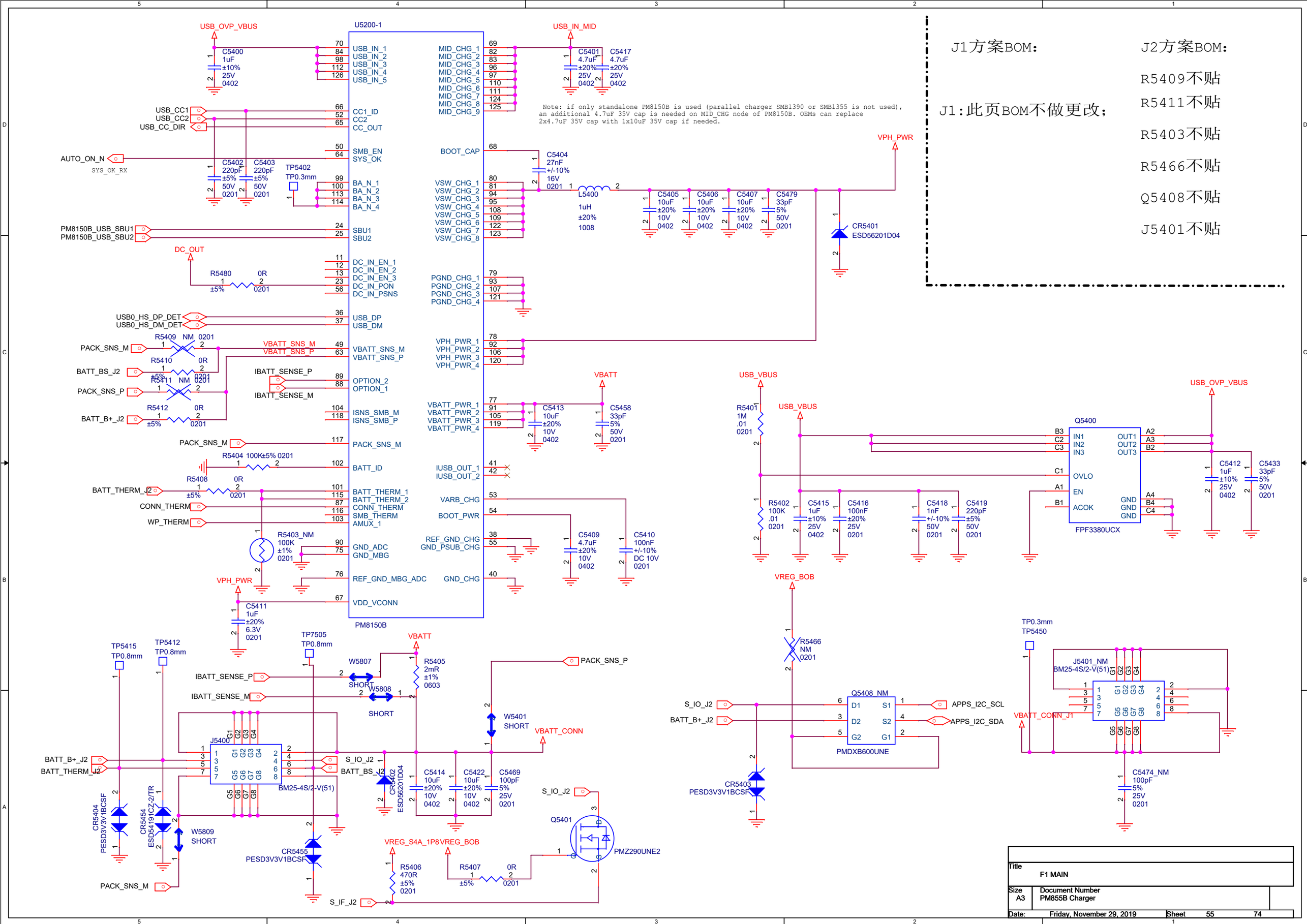
U5200-1
PM8150B
USB_OVP_VBUS
USB_IN_MID
VPH_PWR
VBATT
VREG_BOB
VREG_S4A_1P8
DC_OUT
USB_VBUS
VBATT_CONN
Note: if only standalone PM8150B is used (parallel charger SMB1390 or SMB1355 is not used), an additional 4.7uF 35V cap is needed on MID_CHG node of PM8150B. OEMs can replace 2x4.7uF 35V cap with 1x10uF 35V cap if needed.
J1方案BOM:
J1:此页BOM不做更改;
J2方案BOM:
R5409不贴
R5411不贴
R5403不贴
R5466不贴
Q5408不贴
J5401不贴
Q5400
FPF3380UCX
Q5408_NM
PMDXB600UNE
J5400
BM25-4S/2-V(51)
J5401_NM
BM25-4S/2-V(51)
Q5401
PMZ290UNE2
APPS_I2C_SCL
APPS_I2C_SDA
Title
F1 MAIN
Size
A3
Document Number
PM855B Charger
Date:
Friday, November 29, 2019
Sheet
55
74

J1:此页BOM不做更改；

J2:R5501不贴

R5504不贴
R5515贴0欧姆电阻
Slave charger的BOM全部不贴

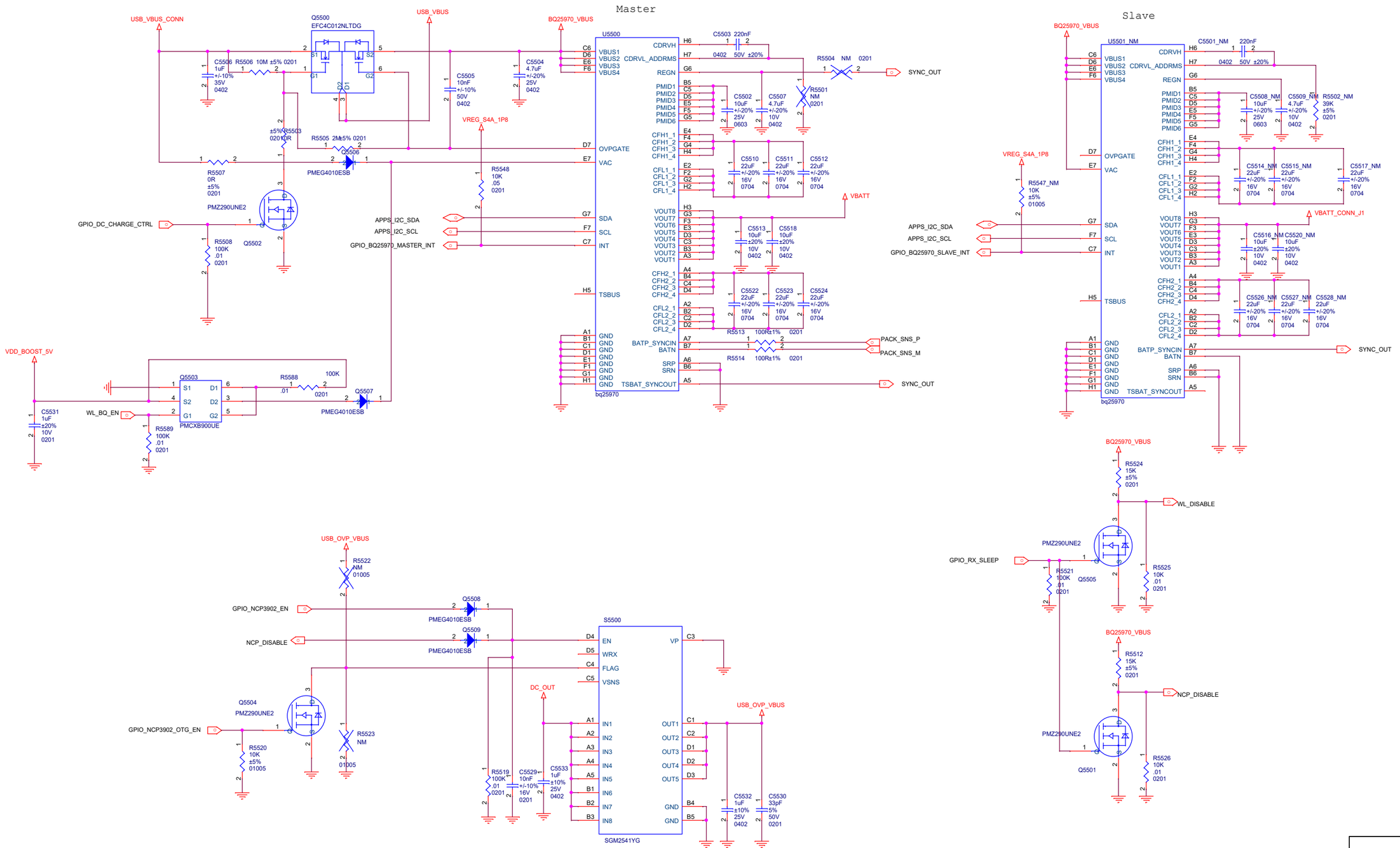

Title	F1 MAIN
Size A2	Document Number IR LED
Date: Friday, November 29, 2019	Sheet

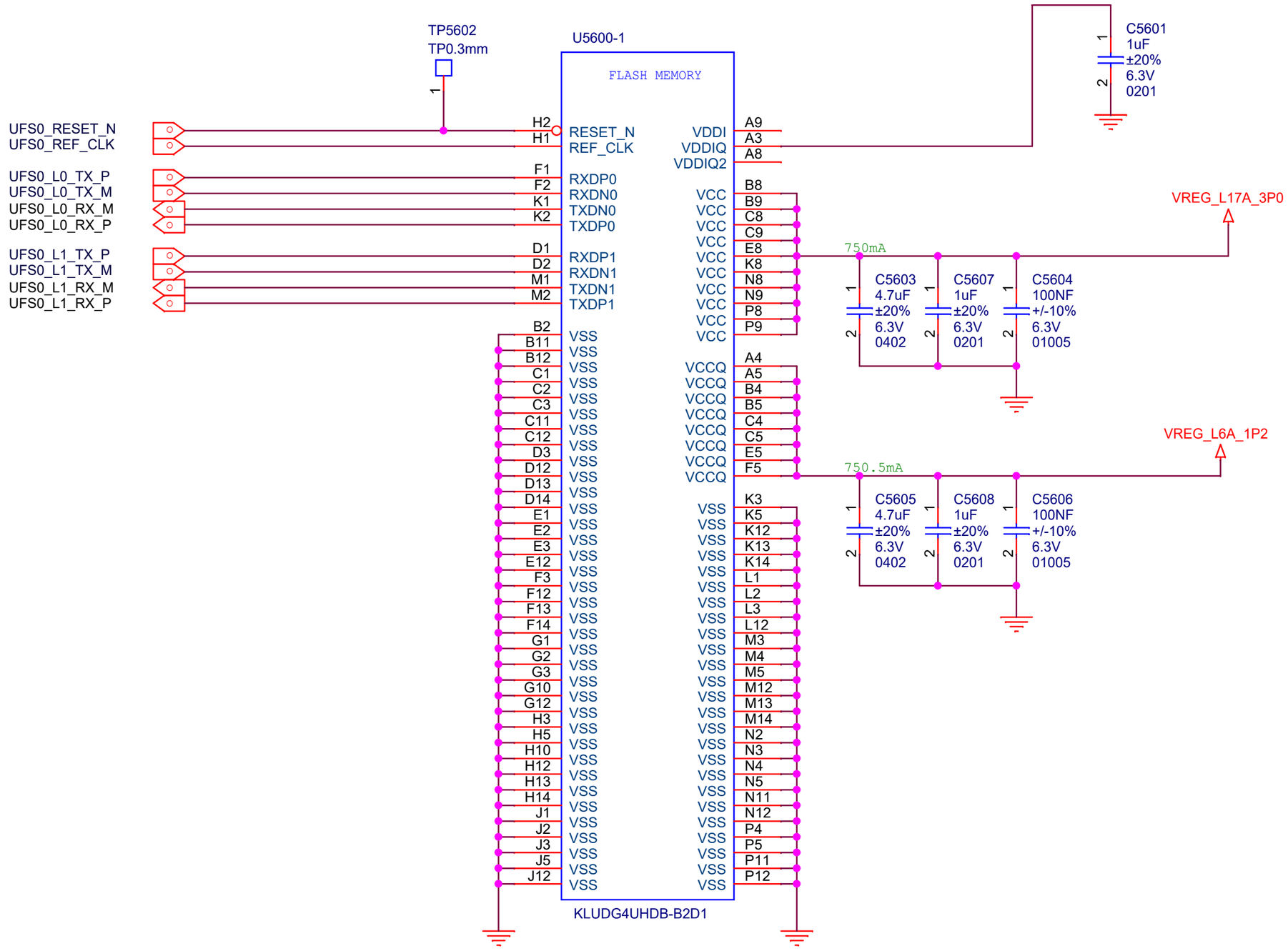

Title	F1 MAIN
Size A4	Document Number MEMORY
Date: Friday, November 29, 2019	Sheet 57 74

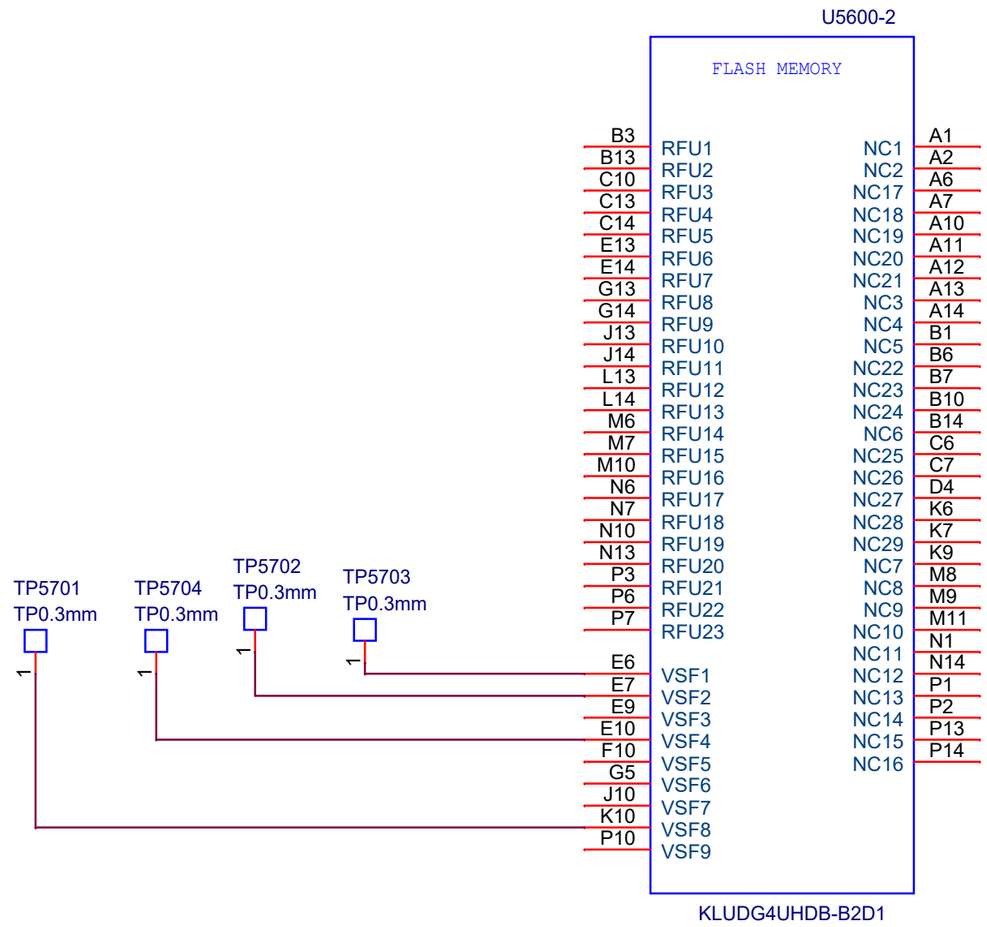

Title	F1 MAIN		
Size A4	Document Number MEMORY-2		
Date: Friday, November 29, 2019		Sheet 58	74

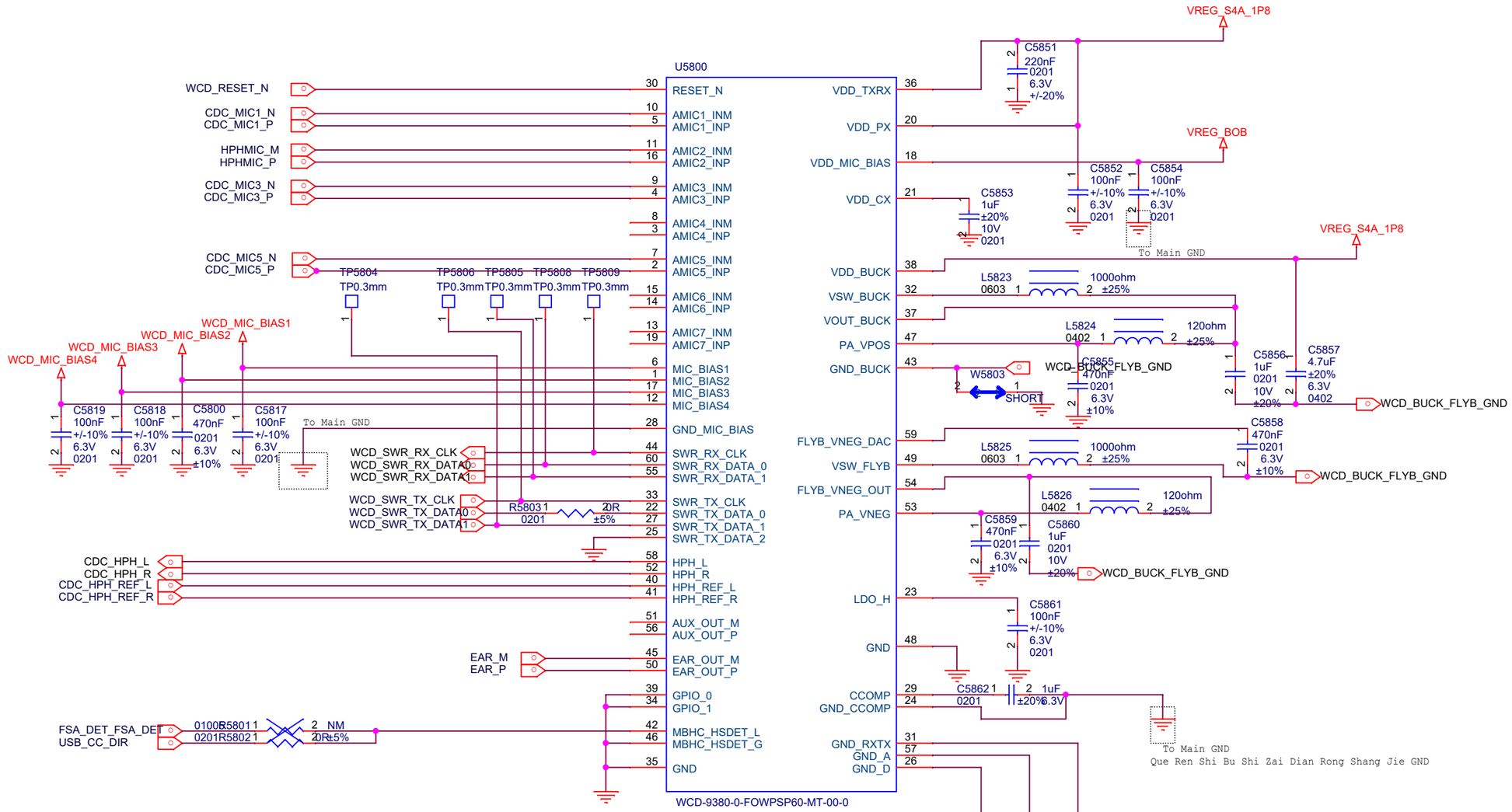

NOTE 1: ROUTE AN ISOLATED GROUND TRACE FROM CCOMP_REF TO THE CAP GROUND, THEN VIA TO THE MAIN GROUND PLANE
NOTE 2: PLACE VDD_BUCK CAP AS CLOSE TO CHIP EDGE AS POSSIBLE AND MINIMIZE LOOP INDUCTANCE
NOTE 3: USE SHORT AND WIDE TRACES FOR BUCK AND FLYBACK RELATED NETS
NOTE 4: ANALOG MIC INPUTS SHOULD BE ISOLATED WITH GROUND FROM NOISY OR SWITCHING SIGNALS AND SUPPLIES

Title	F1 MAIN	
Size A3	Document Number WCD9340-1	
Date: Friday, November 29, 2019	Sheet	

Title	F1 MAIN
Size A3	Document Number WCD9340-2
Date: Friday, November 29, 2019	Sheet

RECEIVER

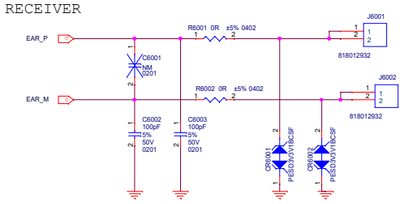

HEADSET

R6029、R6004、C6005靠近WCD9385（U5800）端放置

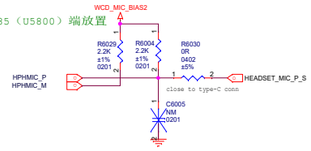

SPKR PA

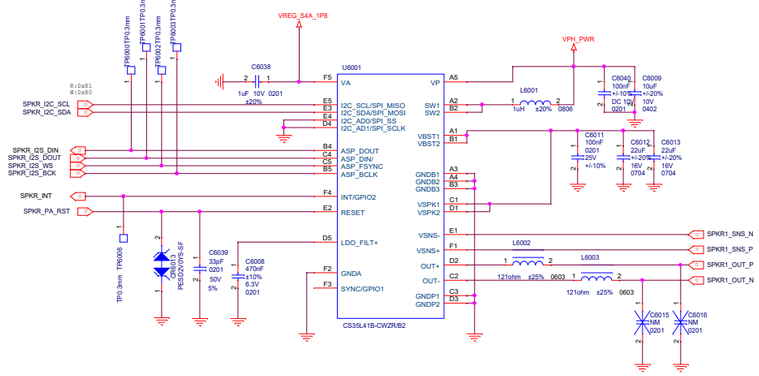

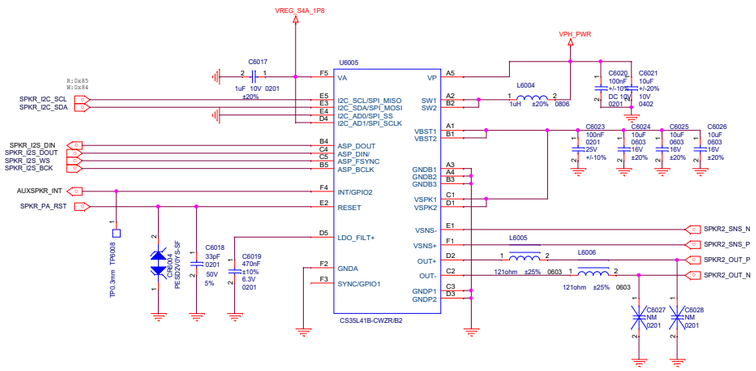

MAIN MIC

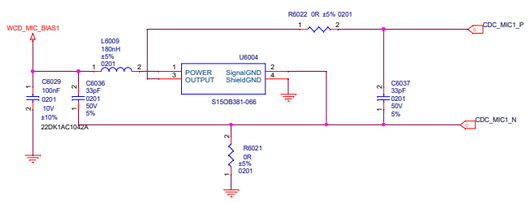

AUX MIC

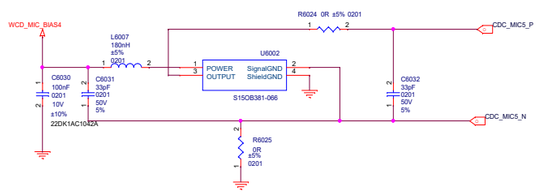

SPK1

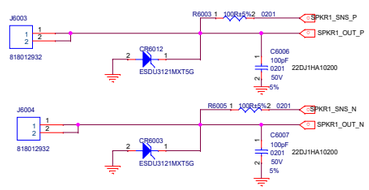

SPK2

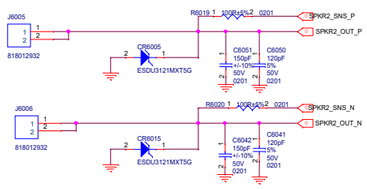

RGB DRIVER

Title	F1 MAIN
Size A1	Document Number Reserved(for AUDIO)
Date: Friday, November 29, 2019	Sheet

A+G

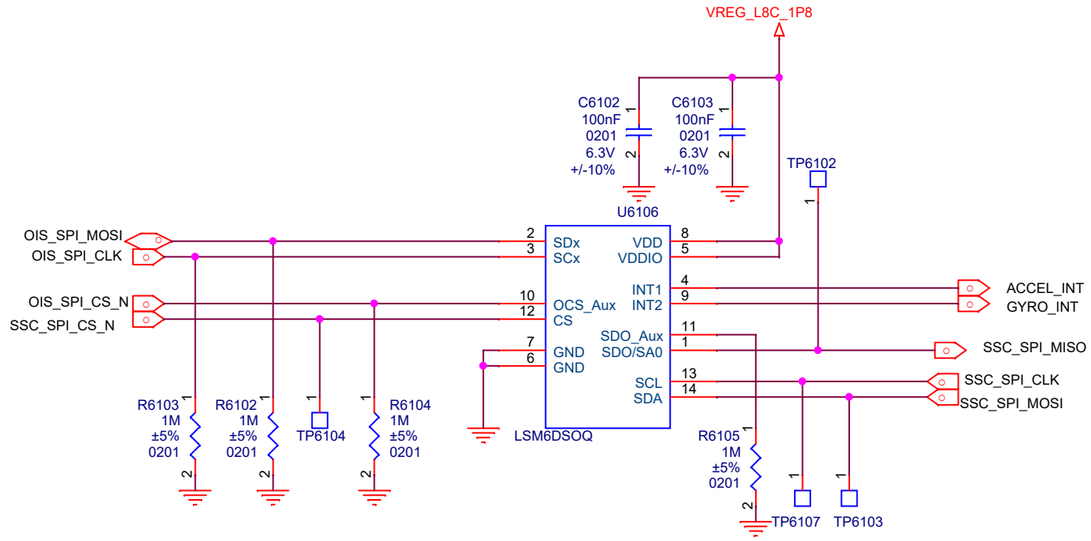

L-sensor

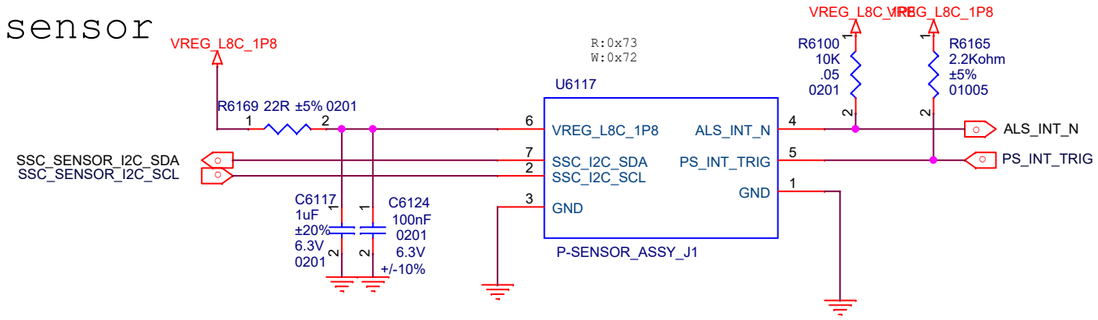

PRESSURE

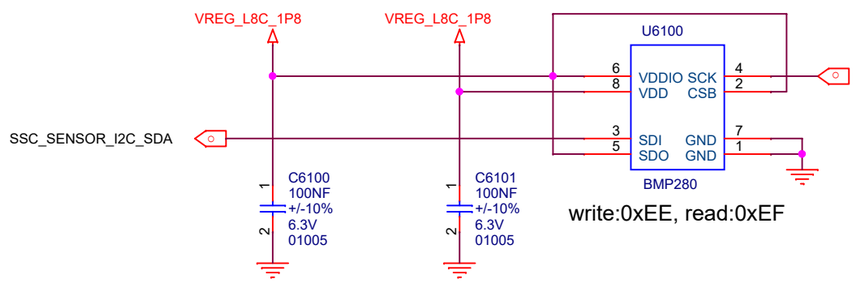

FOD

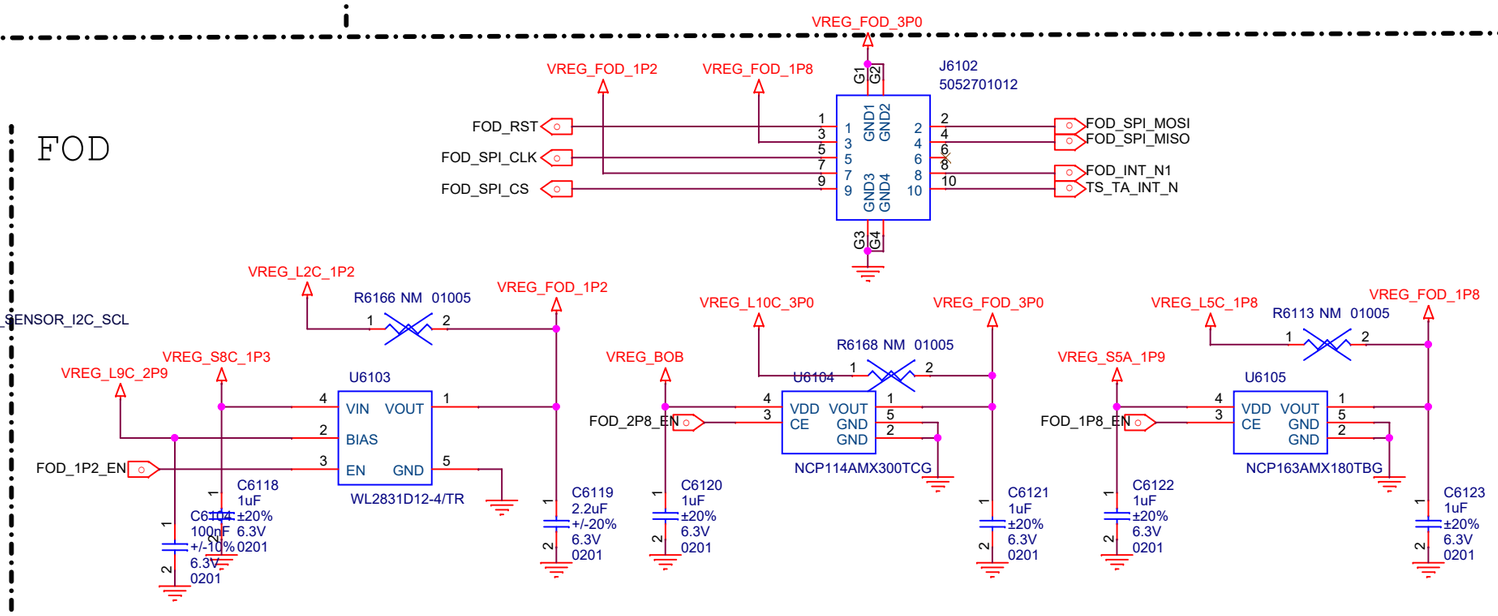

Sidekey

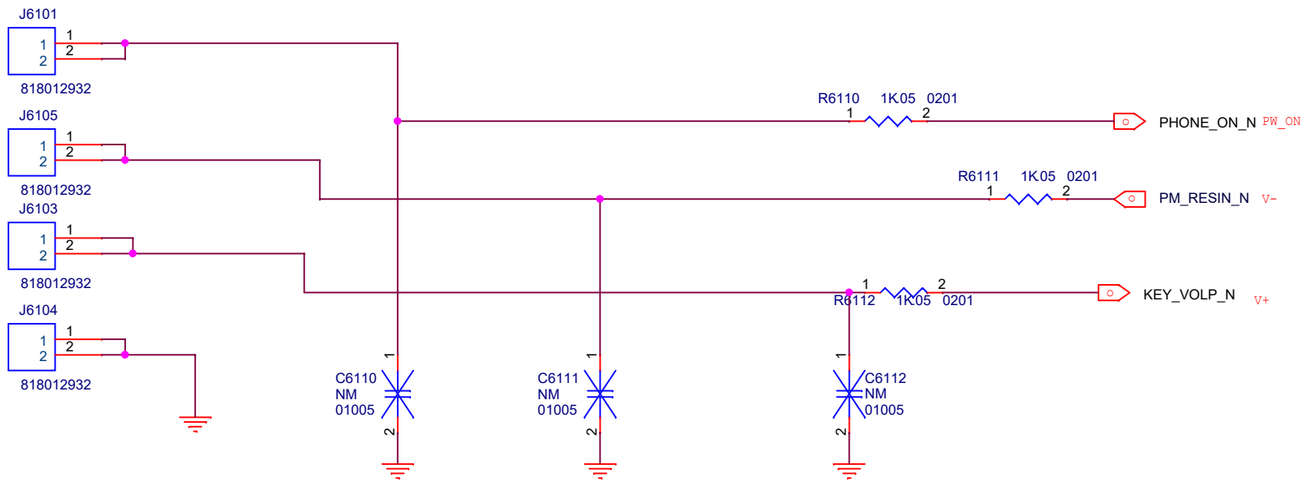

Title	F1 MAIN		
Size A3	Document Number SENSOR		
Date: Friday, November 29, 2019	Sheet 62	74	

HALL

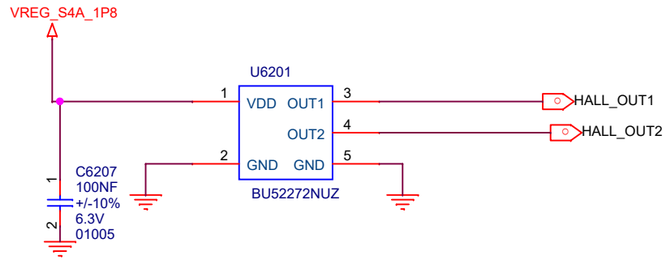

FLASH/FLICKER

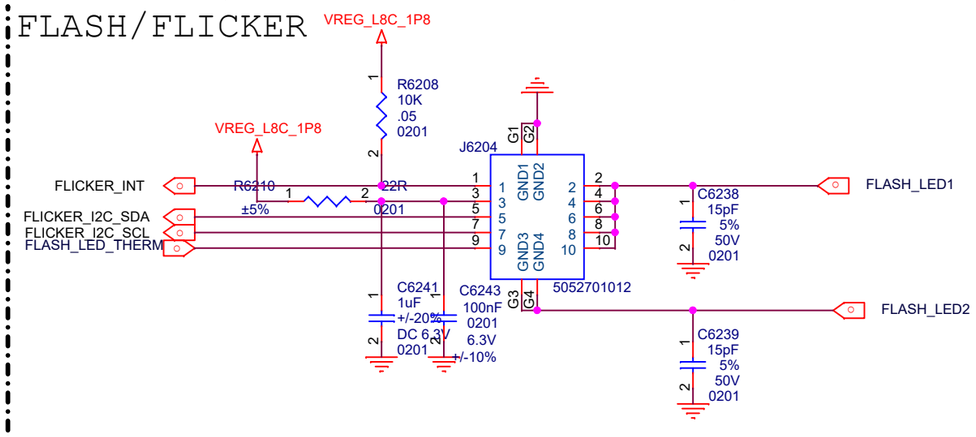

TOF

VL53L1=>I2C W:0X52 R:0X53
VL53L5=>SPI

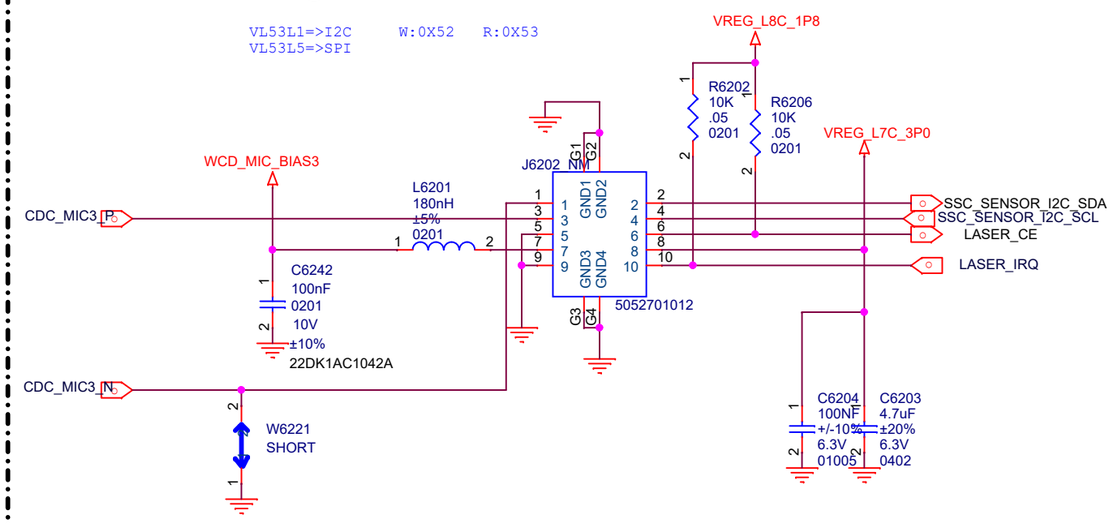

COMPASS

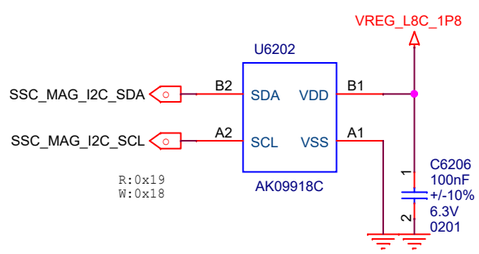

INFRARED

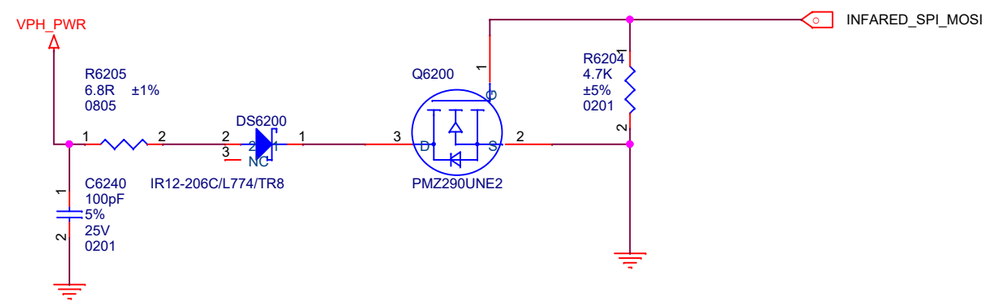

Title	F1 MAIN
Size A3	Document Number SENSOR-2
Date: Friday, November 29, 2019	Sheet 63 74

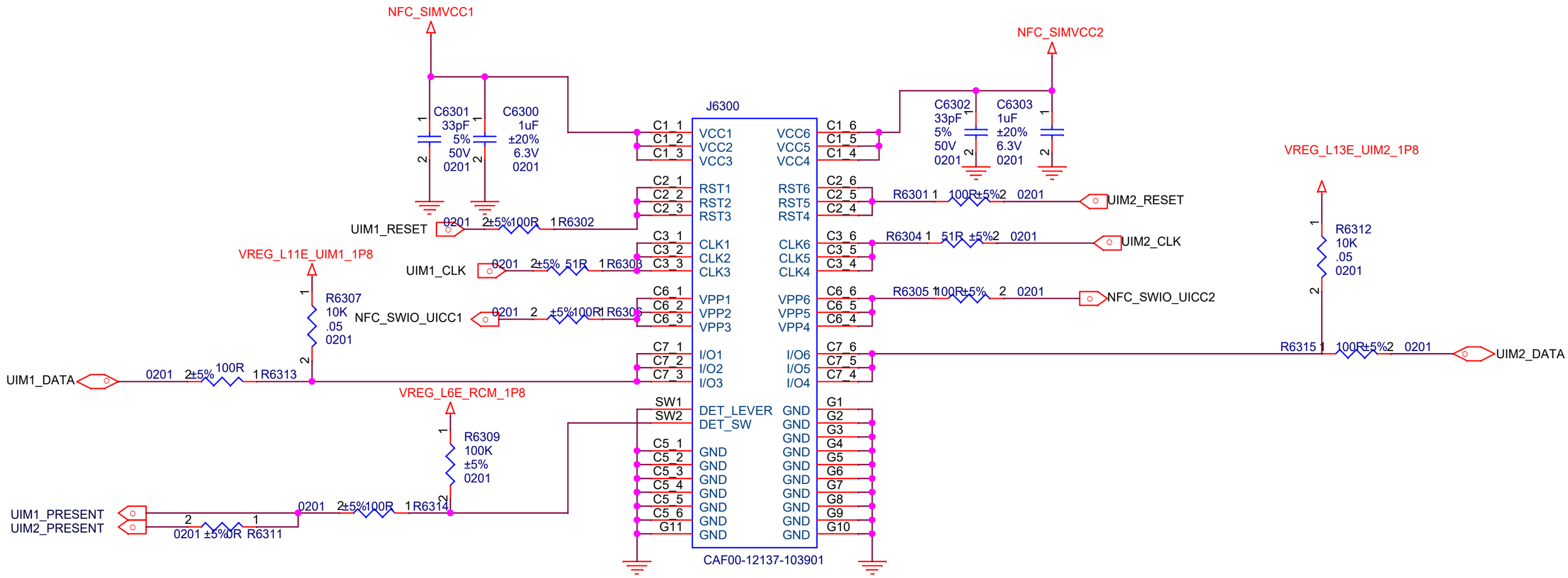

Title	F1 MAIN		
Size A4	Document Number SIM		
Date: Friday, November 29, 2019		Sheet 64	74

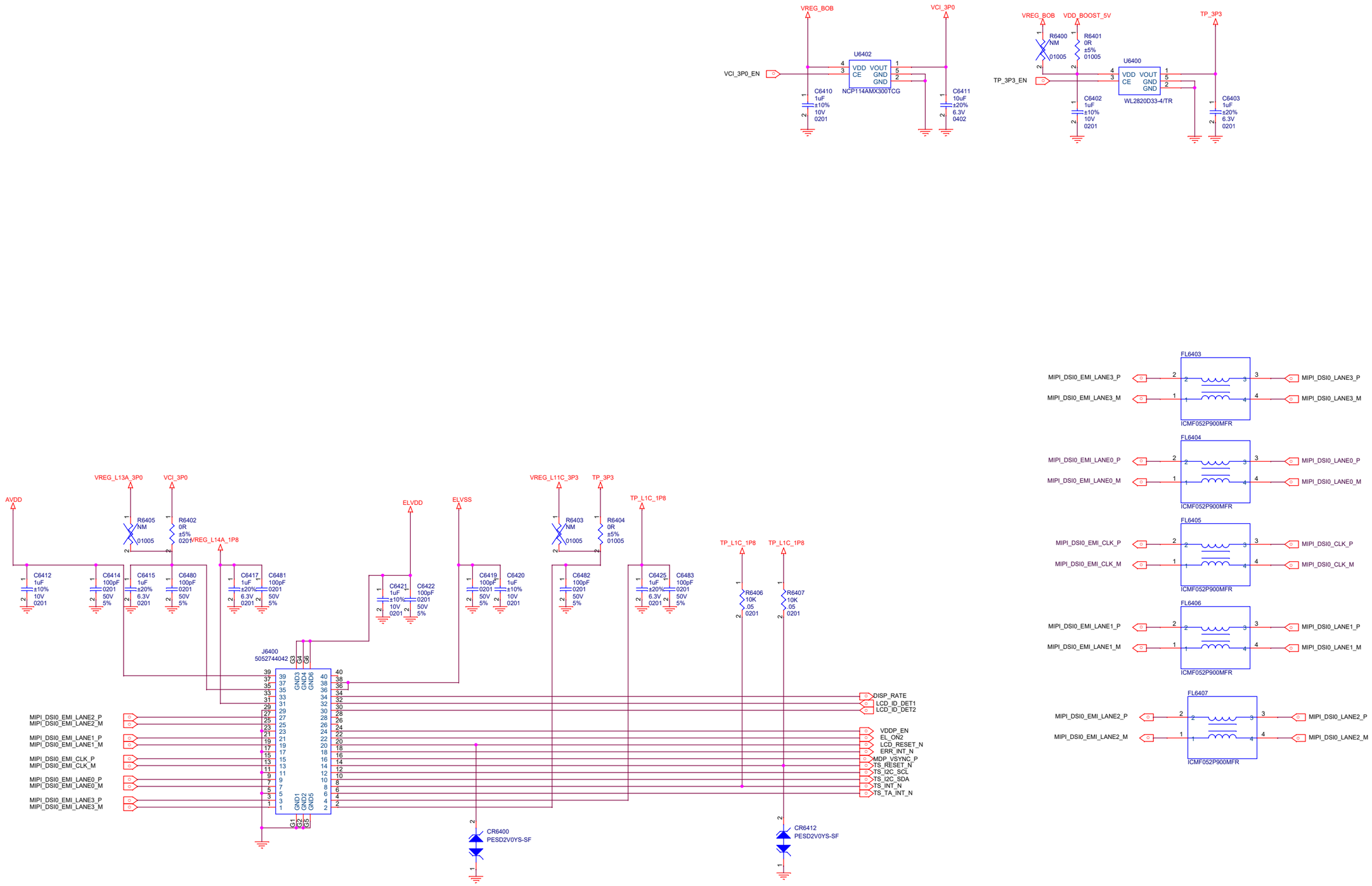

Title	F1 MAIN
Size A2	Document Number AMOLED
Date:	Friday, November 29, 2019

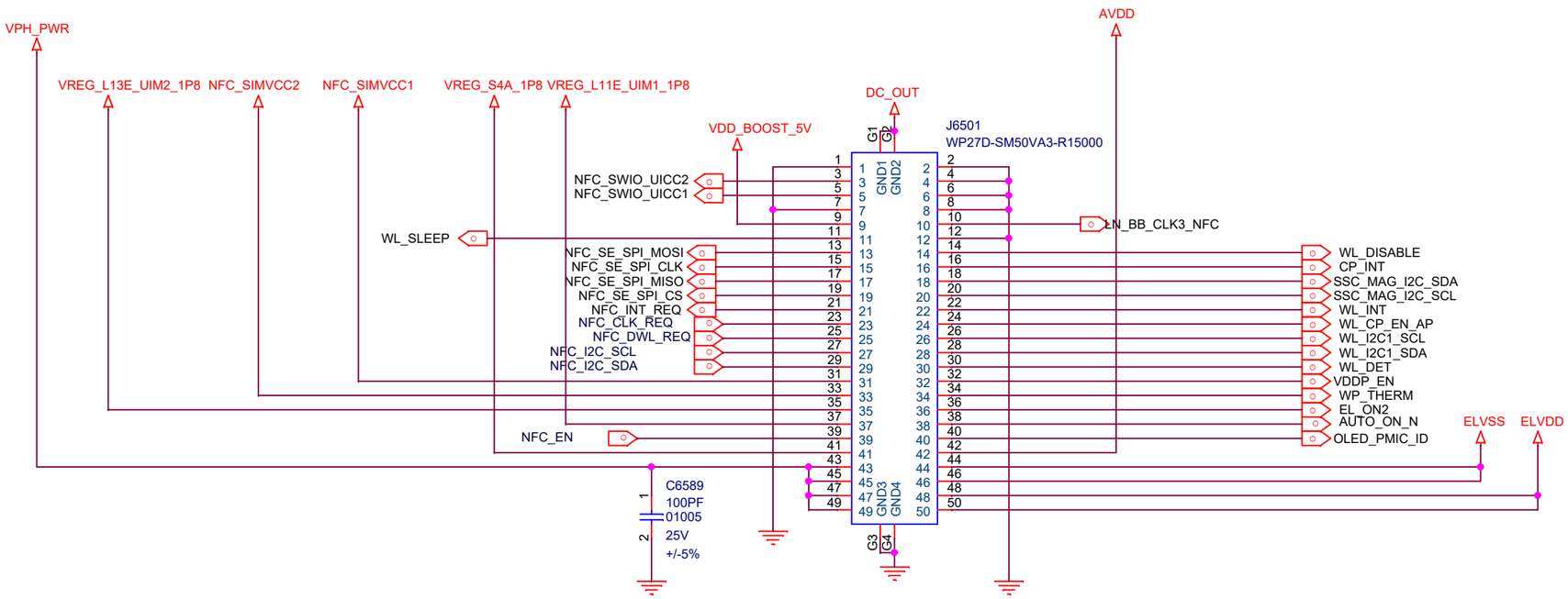

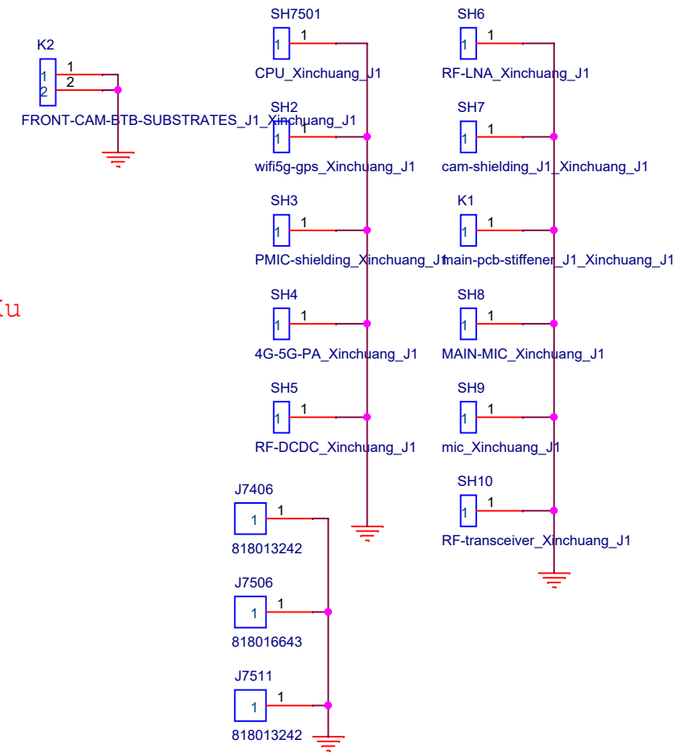

JiDeGengXinKu

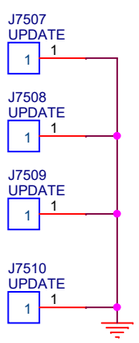

Title	E1 USB SUB	
Size A3	Document Number BTB	Rev P0
Date: Friday, November 29, 2019	Sheet 66 of 74	

J1/J2 front 20M CAMERA

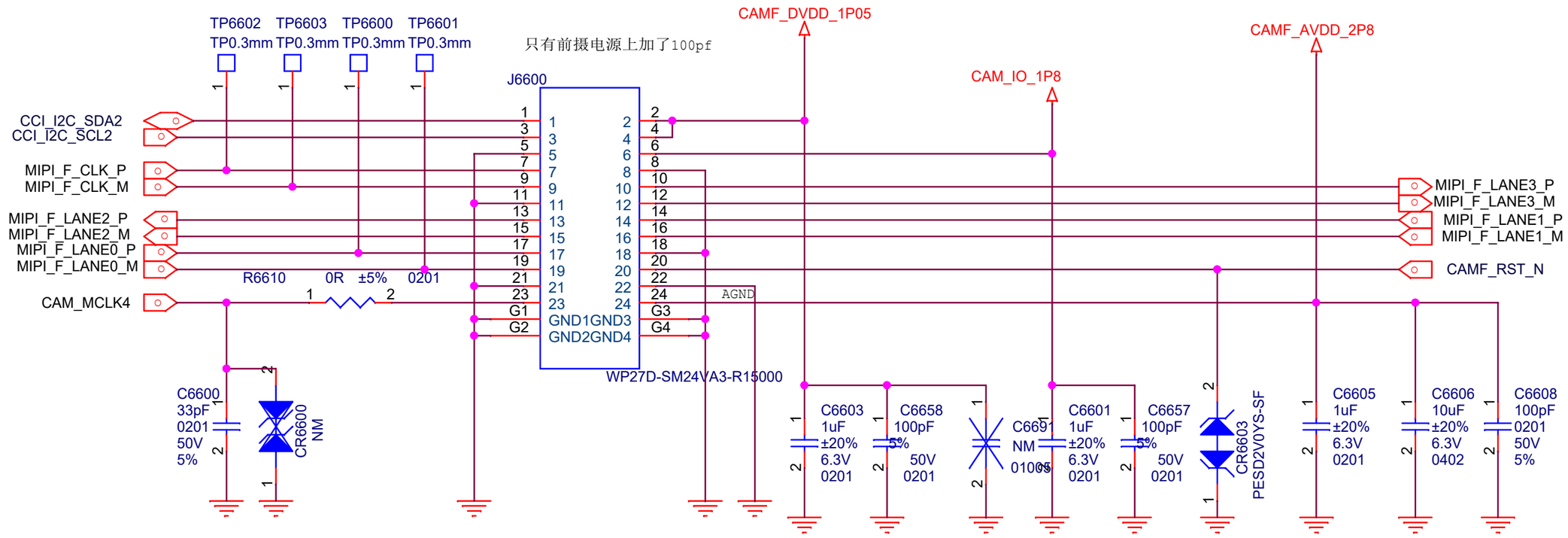

Title	F1 MAIN
Size A4	Document Number Reserved(for Analog FM)
Date: Friday, November 29, 2019	Sheet 67 74

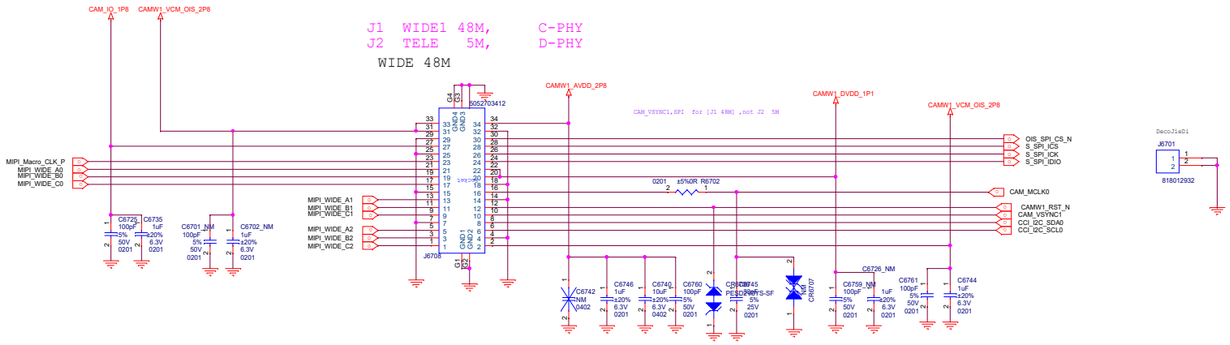

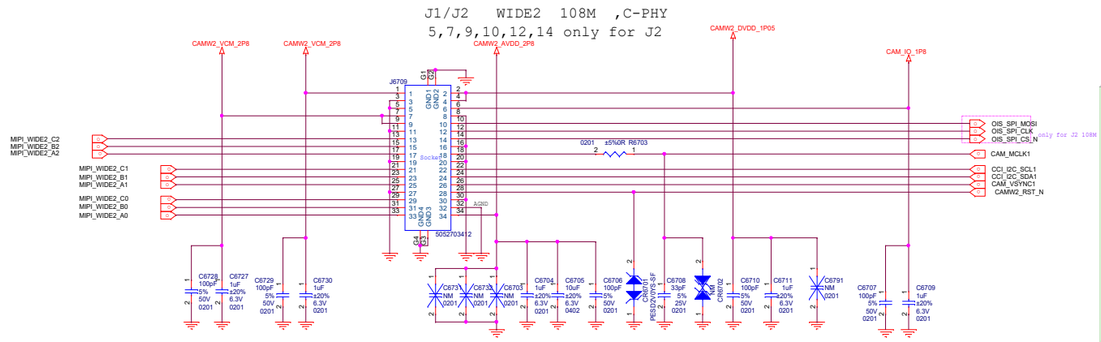

CAM	J1	J2	备注
Front_20M_24pin	相同		
J1(4x 8M)_J2(Depth 5M)_40pin	有 AF+OIS	2 Lan	J2 无 AF +OIS。 C6712，C6713 ，C6714，C6715， J1 only，J2 NM
J1(Ultra108M)_J2(Wide108M)_34pin	有 AF ,Cphy	有 AF+OIS, Cphy	J1 无 OIS。 C6727，C6728 J2 only，J1 NM
J1(Wide 48M)_J2(Tele 5M)_34pin	有 AF+OIS ， Cphy	有 AF ,Dphy 2Lan	J2 无 OIS。 C6701，C6702 J1 only，J2 NM
J1(Macro5M)_J2(Ultra 16M)_30pin	有 AF ,Dphy 2Lan	有 AF	

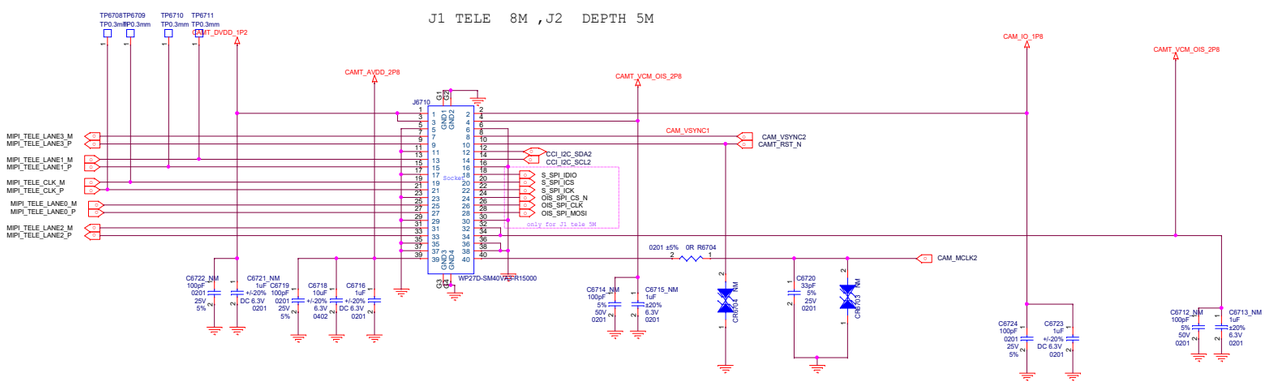

Title	F1 MAIN
Size A1	Document Number WIDE&TELE CAMERA
Date: Friday, November 29, 2019	Sheet

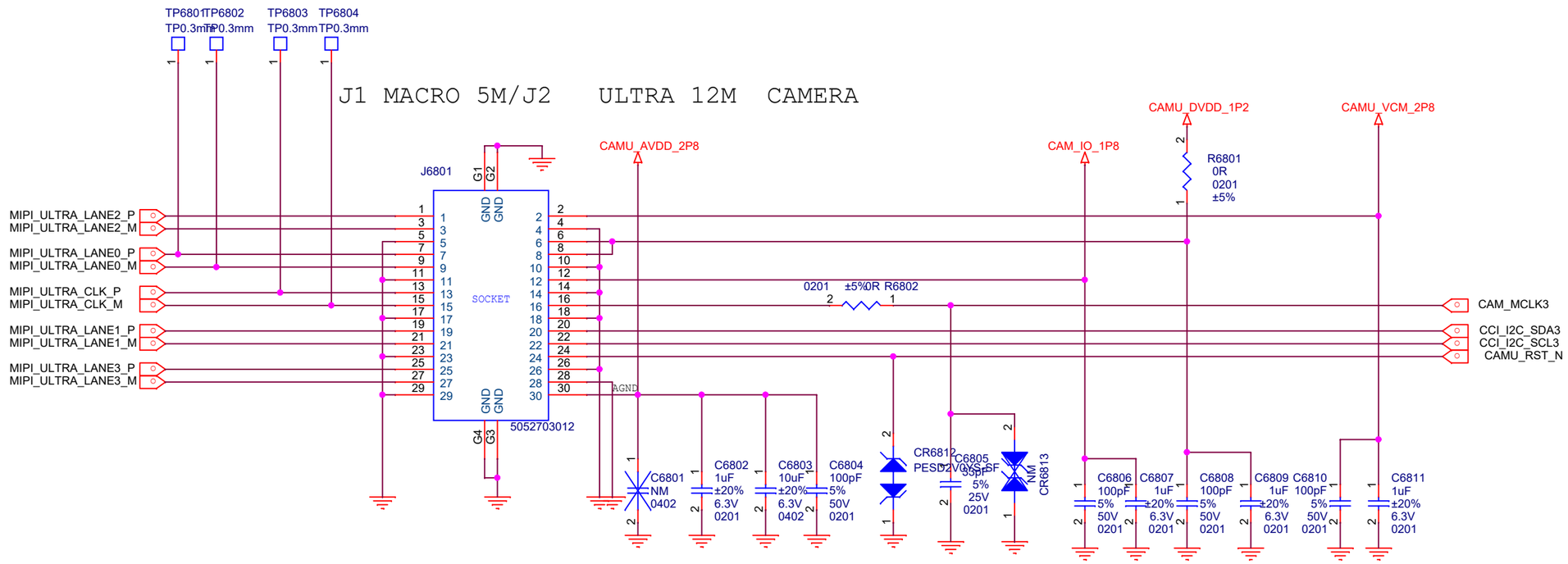

Title	F1 MAIN
Size A3	Document Number ULTRA CAMERA
Date: Friday, November 29, 2019	Sheet 69 74

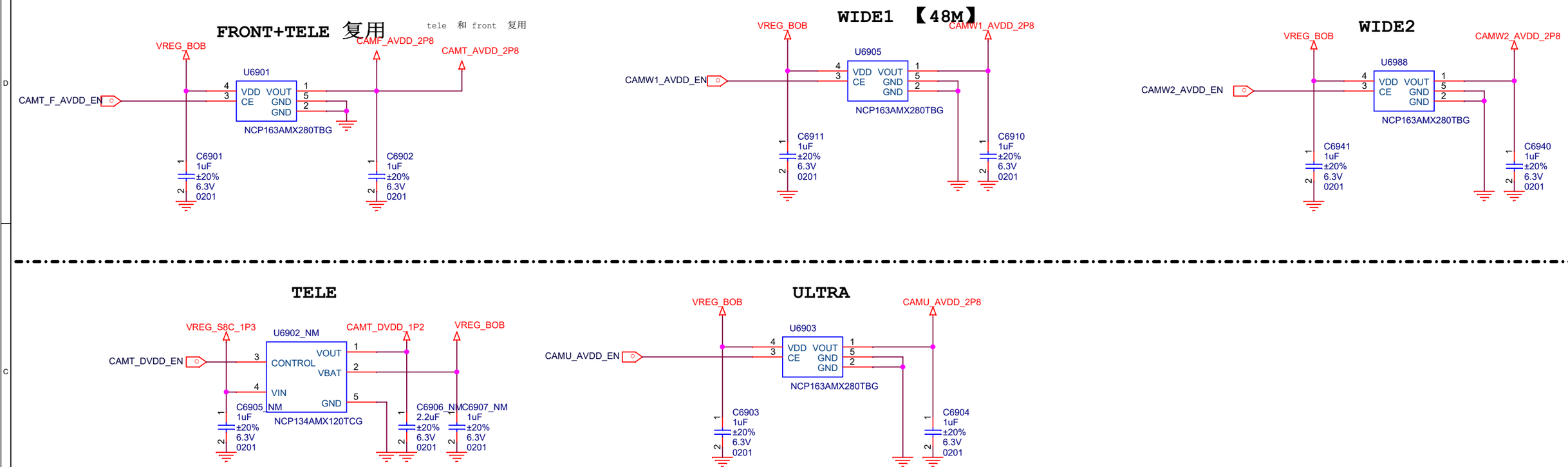

Title	F1 MAIN	
Size A3	Document Number CAMERA LDOs	
Date: Friday, November 29, 2019	Sheet 70	

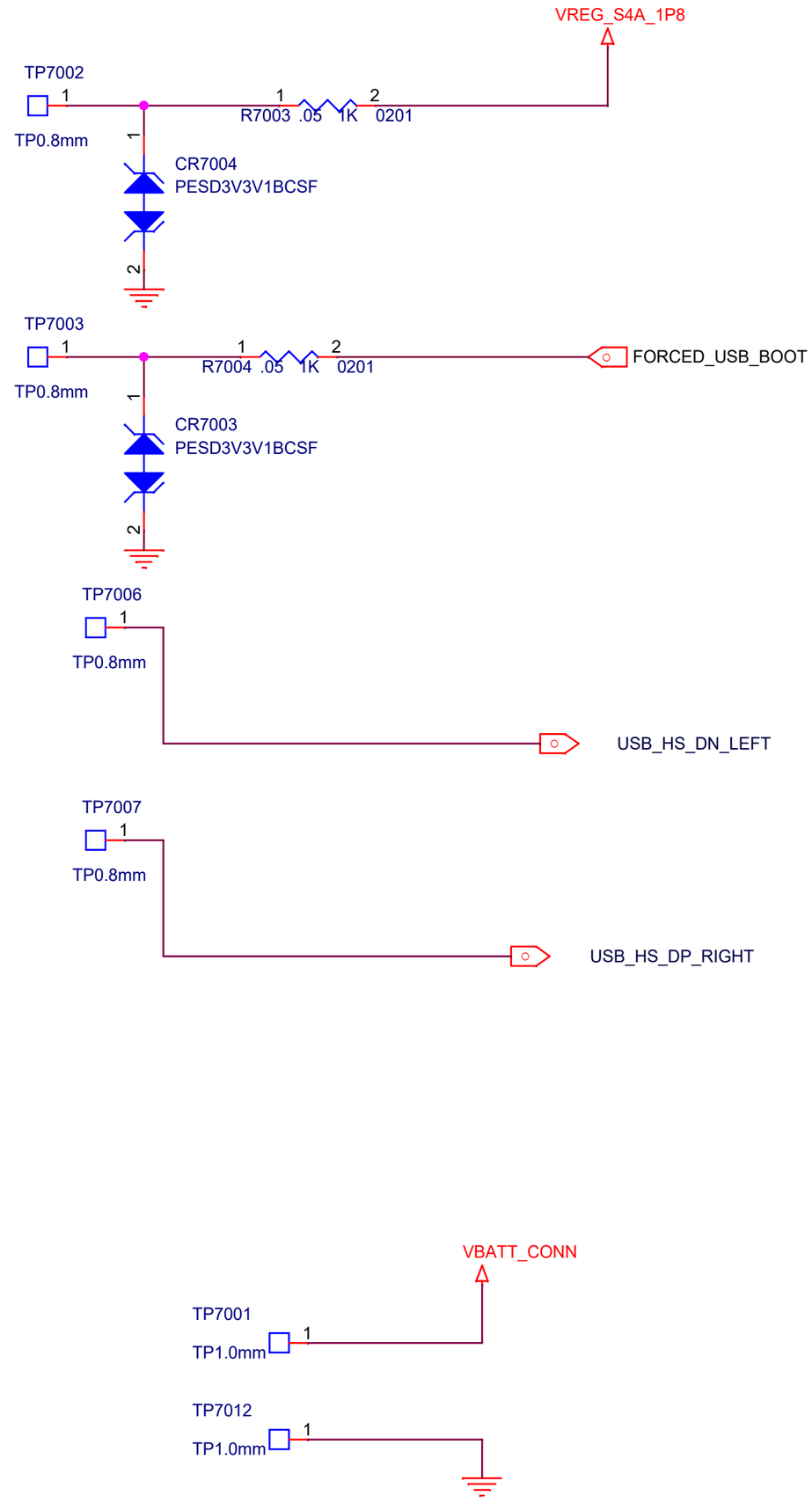

Title	F1 MAIN
Size A4	Document Number IR LED
Date: Friday, November 29, 2019	Sheet

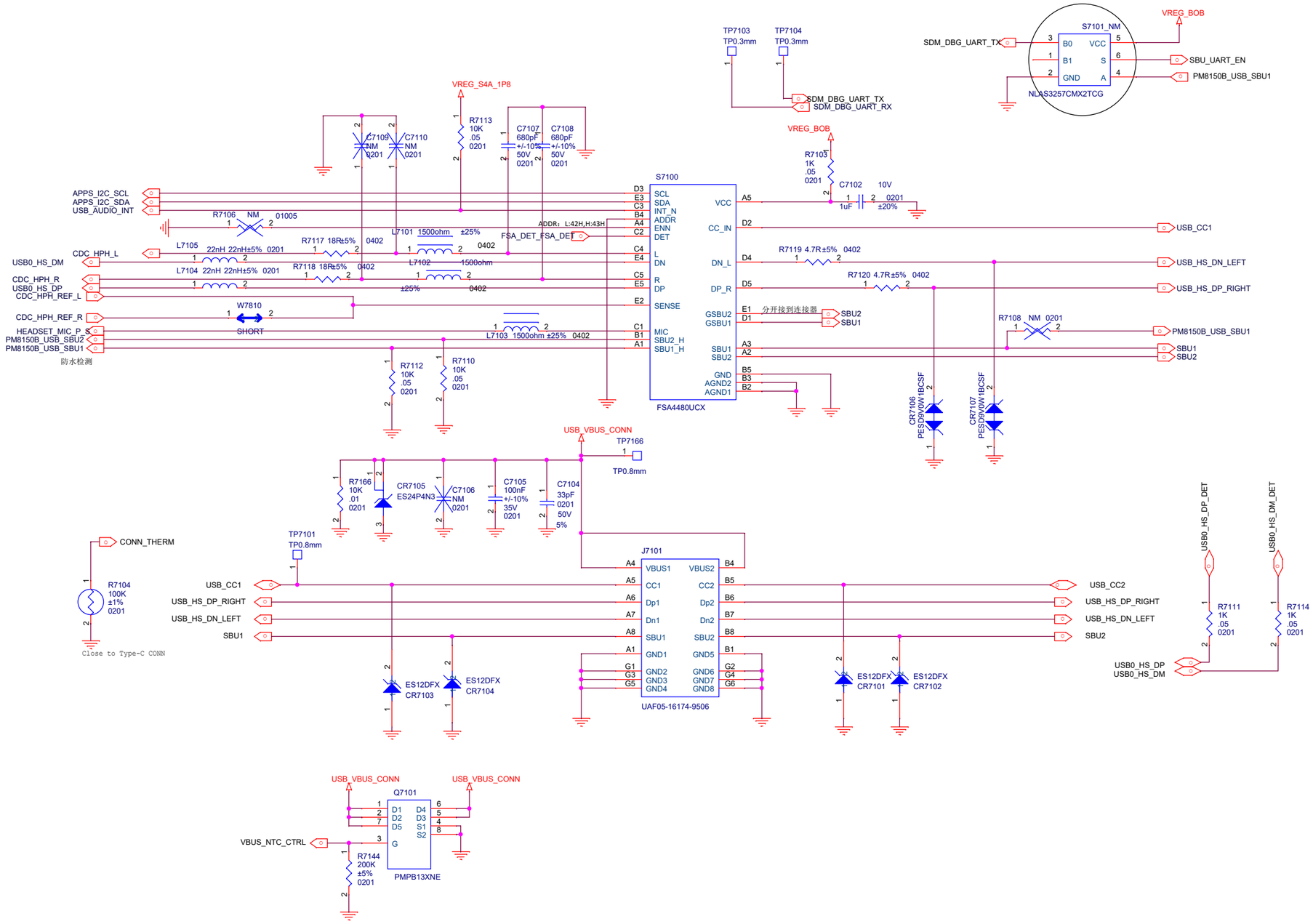

Title	<Title>		
Size C	Document Number <Doc>		Rev <RevCode>
Date: Friday, November 29, 2019	Sheet 72 of 74		

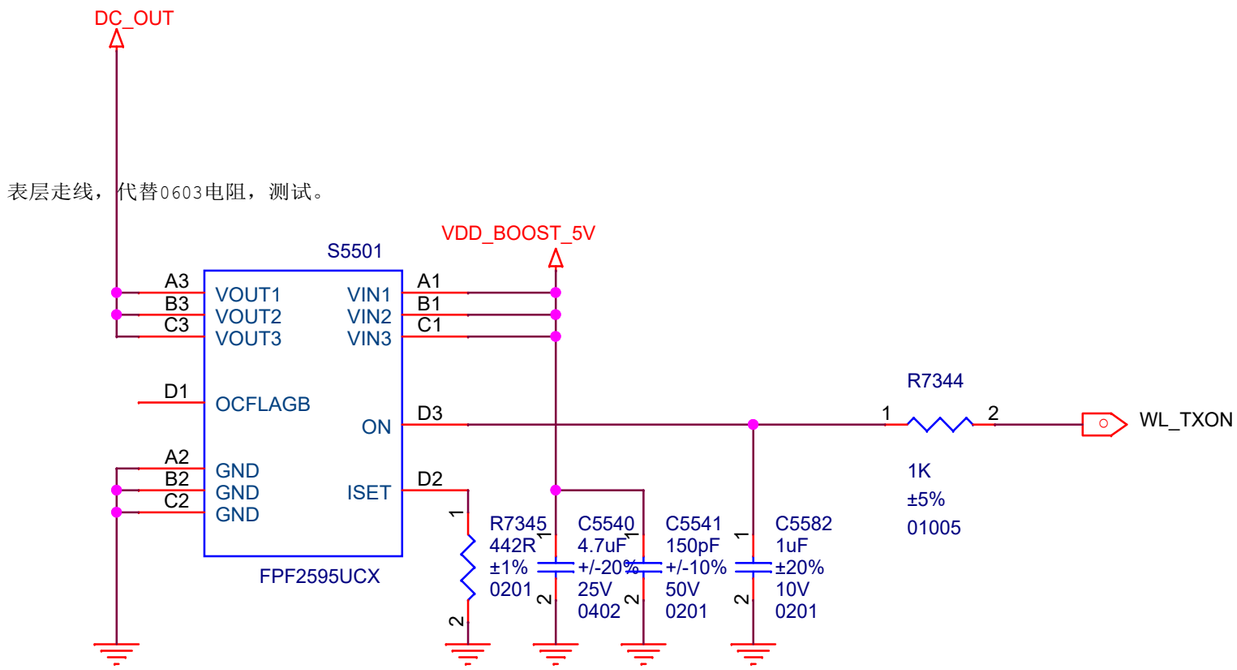

RsetΩ	Min. Current mA	Typ Current mA	Max。Current mA
415	2250	2500	2750
460	2025	2250	2475
520	1800	2000	2200

Title	F1 MAIN	
Size A4	Document Number SMB1390&WL POWER	
Date: Friday, November 29, 2019	Sheet	

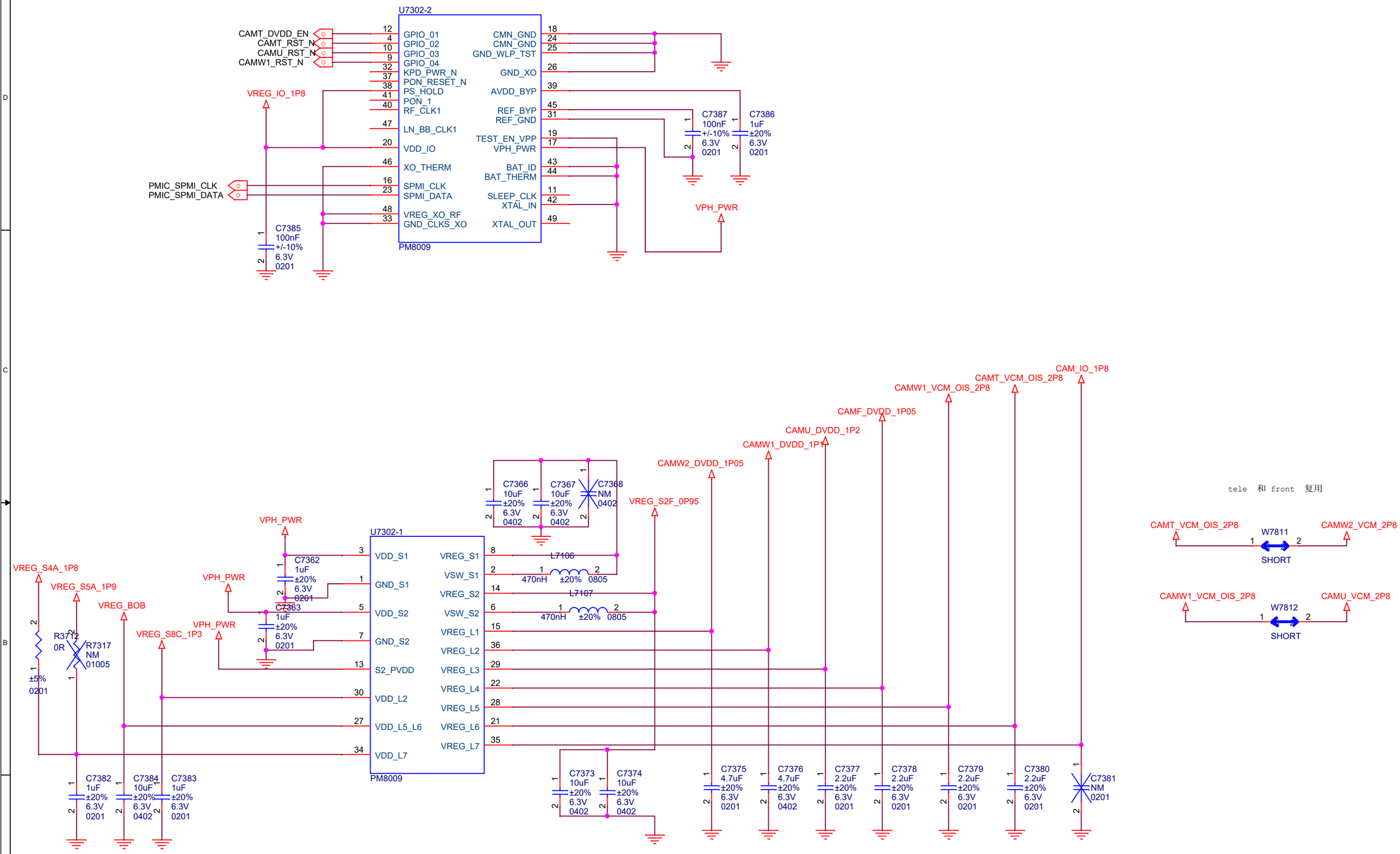

Title	F1 MAIN
Size A3	Document Number CAMERA LDOs
Date:	Friday, November 29, 2019

DRX_ANT

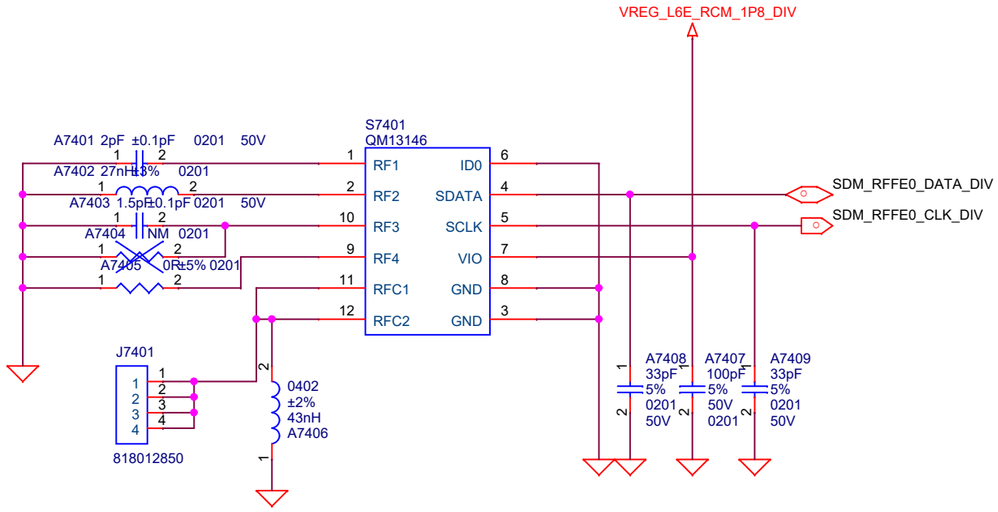

TUNER_CTR

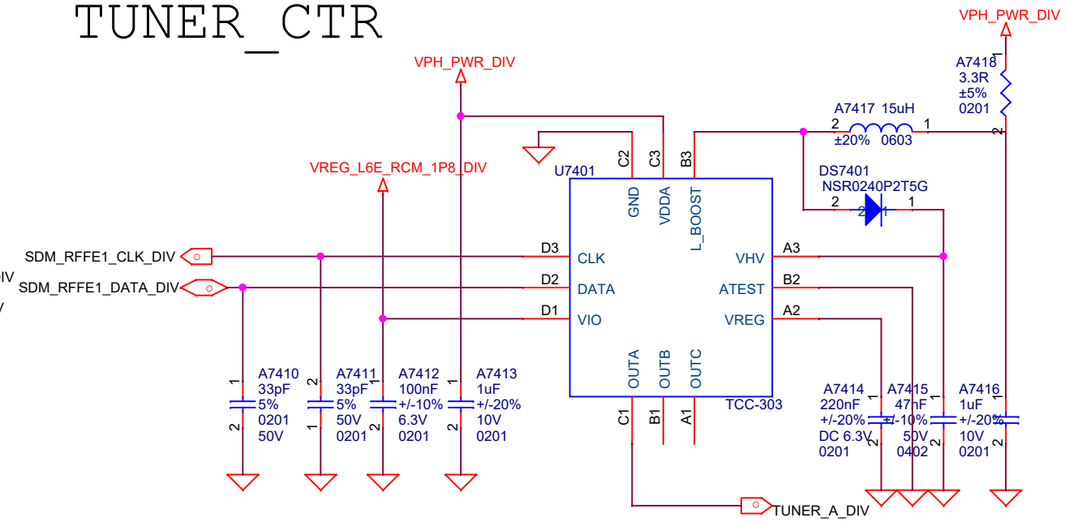

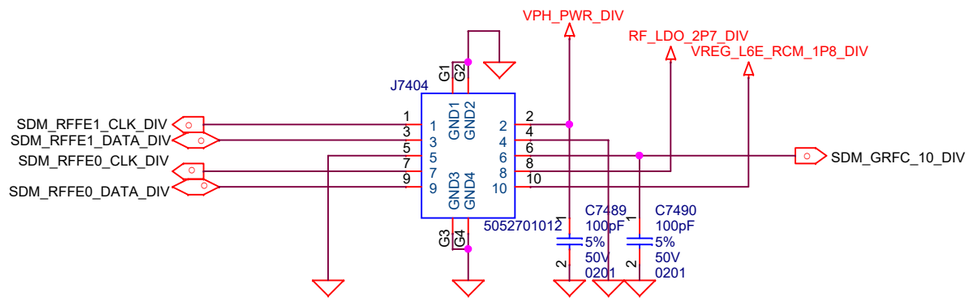

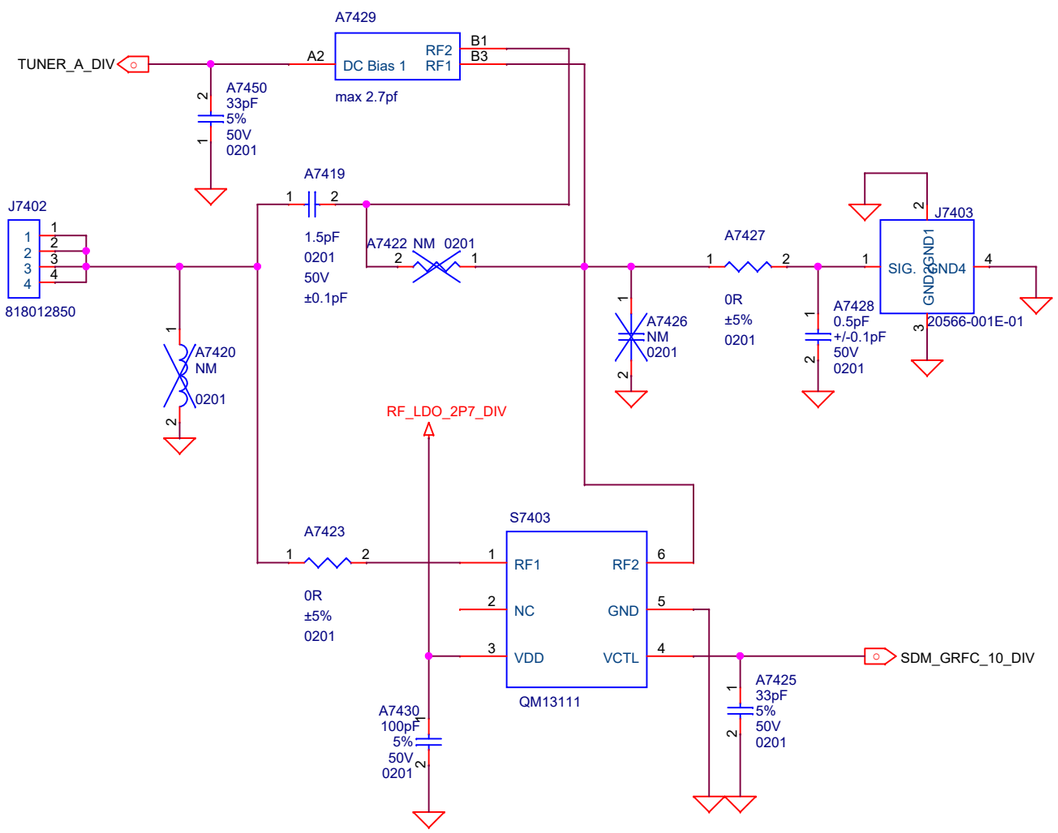

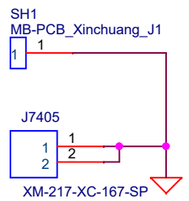

Title	F11 SUB	
Size A3	Document Number <Doc>	Rev P0A
Date: Friday, November 29, 2019	Sheet 75 of 75	